PATLITE®

# GENERAL CATALOG

## 2019-2020

**#1 Ranked Globally** in Signaling Devices

※ 2017, Global Info Research

www.patlite.com

# INDEX


Product Index ..... P.3
Glossary ..... P.8
New Products ..... P.11

**Network** P.31

**Signal Tower** P.53

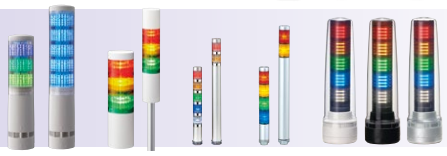

**Signal Light** P.97

**Revolving Warning Light** P.113

**Cube Tower** P.130

**Audibles** P.137

**Hybrid Signaling Devices** P.155

**LED Illumination** P.170

**Options**
- Options P.182
- Replacement Parts P.188

History of PATLITE ..... P.191

# Product Index


| | Model | Model Name | Specifications | Page |
|---|---|---|---|---|
| B | BD-A | Audible Alarm | 32 built-in sounds | 143 |
| | BDV | MP3 Voice Annunciator for Panel Mounting | MP3 63 seconds | 145 |
| | BK | Audible Alarm | 32 built-in sounds | 147 |
| | BKV | MP3 Voice Annunciator for Panel Mounting | MP3 63 seconds | 149 |
| | BM | Audible Alarm | 2 Audible Alarm sounds | 139 |
| | BSV | Slim MP3 Voice Annunciator | MP3 63 seconds | 141 |
| | BSV- L | Slim MP3 Voice Annunciator | MP3 520 seconds | 140 |
| C | CLA | LED Work Light | Polycarbonate Body,IP66/67/69K | 173 |
| | CLA-EX | Explosion proof LED Work Light | Water Resistant | 29 |
| | CLK | LED Work Light | Aluminum Body,Stainless steel,IP66G/67G/69K | 177 |
| | CLK-EX | Explosion proof LED Work Light | Water and Oil Resistant | 28 |
| | CLN | LED Work Light | Aluminum Body,IP66G/67G/69K | 181 |
| | CLN-EX | Explosion proof LED Work Light | Water and Oil Resistant | 27 |
| | CWA | LED Work Light | Polycarbonate Body,IP65 | 175 |
| | CWF | LED Work Light | Switch,DC type/AC type | 172 |
| | CWK | LED Work Light | Aluminum Body,IP66G/67G | 179 |
| E | EHS | Audible Alarm Horn | 32 built-in sounds | 151 |
| | EHS-EX | Explosion proof Audible Alarm Horn | 32 built-in sounds | 26 |
| | EHV | MP3 Voice Annunciator Horn | 63 built-in sounds | 151 |
| | EHV-EX | Explosion proof MP3 Voice Annunciator Horn | 63 built-in sounds | 26 |
| F | FV-127JP | MP3 Player Circuit Board | SD card compatible, maximum 127 messages | 153 |
| H | HP | Large Revolving Light | ϕ180 Lighting | 128 |
| | HSST | Signal Tower with Switch Box | ϕ50, LED | 77 |
| K | KG | Large Revolving Light | ϕ186, Large Mirrored Reflector | 129 |
| | KHE | Small LED Signal Light | ϕ100, Flash, LED Rotating Light, Strobe LED | 104 |
| | KJ | Revolving Tower Light | □116, Revolving Light | 135 |
| | KJB | Revolving Tower Light | □116, Revolving Light, Buzzer | 135 |
| | KJS | Small Revolving Tower Light | □82, Revolving Light | 133 |

# Product Index


| | Model | Model Name | Specifications | Page |
|---|---|---|---|---|
| K | KJSB | Small Revolving Tower Light | □82, Revolving Light, Buzzer | 133 |
| | KJT | Audible Revolving Tower Light | 32 built-in sounds | 164 |
| | KP-A | Medium Revolving Light | ϕ162, Revolving Light | 126 |
| | KPE-A | Medium LED Chase Light/Flashing Signal Light | ϕ162, LED Rotating Light, Flashing | 110 |
| | KUS | Modular Signal Tower | □70, Lighting, Base Unit | 95 |
| | KUS-B | Modular Signal Tower | □70, Audible Alarm Unit | 95 |
| | KUS-C | Modular Signal Tower | □70, Lighting, Open Collector, Base Unit | 95 |
| | KUS-EA | Modular Signal Tower | □70, LED Unit | 95 |
| | KUS-F | Modular Signal Tower | □70, Lighting/Flashing, Base Unit | 95 |
| | KUS-FC | Modular Signal Tower | □70, Lighting/Flashing, Open Collector, Base Unit | 95 |
| | KUS-S | Modular Signal Tower | □70, Incandescent Bulb Unit | 95 |
| L | LA6 | Signal Tower | ϕ60, Lighting/Flashing, LED | 55 |
| | LA6-POE | Signal Tower | ϕ60, Lighting/Flashing, LED, PoE Supported | 45 |
| | LFH | Small LED Flash Signal Light | ϕ100, Flashing, LED | 106 |
| | LGE | Large LED Signal Tower | ϕ100, Lighting, LED | 88 |
| | LGE-FB | Large LED Signal Tower | ϕ100, Lighting/Flashing, LED, Buzzer | 88 |
| | LKEH-EX | Explosion-Proof Signal Tower | ϕ100, Lighting/Flashing, LED Signal Tower, 32 built-in sounds | 25 |
| | LKEH-F□ | Signal Tower | ϕ100, Lighting/Flashing, LED Signal Tower, 32 built-in sounds | 157 |
| | LKEH-FV | MP3 Voice Annunciator with LED Signal Tower | ϕ100, Lighting/Flashing, LED Signal Tower, 63 seconds | 157 |
| | LR4-EX | Explosion-Proof Signal Tower | ϕ40, Lighting/Flashing | 23 |
| | LR4-E-Z | LED Unit | ϕ40, Clear Globe LED Unit | 62 |
| | LR4-LJBW | Signal Tower | ϕ40, Lighting/Flashing, Pole Mounted L-angle, Buzzer, LED | 66 |
| | LR4-LJNW | Signal Tower | ϕ40, Lighting, Pole Mounted L-angle, LED | 66 |
| | LR4-PJBW | Signal Tower | ϕ40, Lighting/Flashing, Pole Mounted Circular Bracket, Buzzer, LED | 65 |
| | LR4-PJNW | Signal Tower | ϕ40, Lighting/Flashing, Pole Mounted Circular Bracket, LED | 65 |
| | LR4-QJBW | Signal Tower | ϕ40, Lighting/Flashing, Pole Mounted Folding Bracket, Buzzer, LED | 63 |
| | LR4-QJNW | Signal Tower | ϕ40, Lighting, Pole Mounted Folding Bracket, LED | 63 |
| | LR4-WJBW | Signal Tower | ϕ40, Lighting/Flashing, Direct Mount, Buzzer, LED | 64 |
| | LR4-WJNW | Signal Tower | ϕ40, Lighting, Direct Mount, LED | 64 |
| | LR5-LJBW | Signal Tower | ϕ50, Lighting/Flashing, Pole Mounted L-angle, Buzzer, LED | 66 |
| | LR5-LJNW | Signal Tower | ϕ50, Lighting, Pole Mounted L-angle, LED | 66 |
| | LR5-PJBW | Signal Tower | ϕ50, Lighting/Flashing, Pole Mounted Circular Bracket, Buzzer, LED | 65 |
| | LR5-PJNW | Signal Tower | ϕ50, Lighting, Pole Mounted Circular Bracket, LED | 65 |
| | LR5-WJBW | Signal Tower | ϕ50, Lighting/Flashing, Direct Mount, Buzzer, LED | 64 |

# Product Index


| | Model | Model Name | Specifications | | Page |
|---|---|---|---|---|---|
| L | LR5-WJNW | Signal Tower | ϕ50, | Lighting, Direct Mount, LED | 64 |
| | LR6-E-MZ | Signal Tower | ϕ60, | Multi-color LED Unit | 62 |
| | LR6-EX | Explosion-Proof Signal Tower | ϕ60, | Lighting/Flashing | 24 |
| | LR6-E-Z | Signal Tower | ϕ60, | Clear Globe LED Unit | 62 |
| | LR6-LJBW | Signal Tower | ϕ60, | Lighting/Flashing, Pole Mounted L-angle, Buzzer, LED | 66 |
| | LR6-LJNW | Signal Tower | ϕ60, | Lighting, Pole Mounted L-angle, LED | 66 |
| | LR6-PJBW | Signal Tower | ϕ60, | Lighting/Flashing, Pole Mounted Circular Bracket, Buzzer, LED | 65 |
| | LR6-PJNW | Signal Tower | ϕ60, | Lighting, Pole Mounted Circular Bracket, LED | 65 |
| | LR6-QJBW | Signal Tower | ϕ60, | Lighting/Flashing, Pole Mounted Folding Bracket, Buzzer, LED | 63 |
| | LR6-QJNW | Signal Tower | ϕ60, | Lighting, Pole Mounted Folding Bracket, LED | 63 |
| | LR6-USB | USB-controlled Signal Tower | ϕ60, | Lighting/Flashing, LED, USB Supported | 33 |
| | LR6-WC | Signal Tower | ϕ60, | Lighting,Direct Mount / M12 Connector | 66 |
| | LR6-WJBW | Signal Tower | ϕ60, | Lighting/Flashing, Direct Mount, Buzzer, LED | 64 |
| | LR6-WJNW | Signal Tower | ϕ60, | Lighting, Direct Mount, LED | 64 |
| | LR7-WJBW | Signal Tower | ϕ70, | Lighting/Flashing, Direct Mount, Buzzer, LED | 64 |
| | LR7-WJNW | Signal Tower | ϕ70, | Lighting, Direct Mount, LED | 64 |
| | LS7-BWC | LED Signal Tower | ϕ70, | Lighting, LED, Buzzer, M12 Connector Type | 85 |
| | LS7-FBWH | LED Signal Tower | ϕ70, | Lighting/Flashing. LED. Buzzer. Wire Type | 85 |
| | LS7-WC | LED Signal Tower | ϕ70, | Lighting, LED, M12 Connector Type | 85 |
| | LS7-WH | LED Signal Tower | ϕ70, | Lighting, LED, Wire Type | 85 |
| M | ME-A | Compact LED Signal Tower | ϕ25, | Lighting, LED (Standard body) | 79 |
| | MES-A | Compact LED Signal Tower | ϕ25, | Lighting, LED (Short body) | 79 |
| | MP | Small LED Signal Tower | ϕ30, | Lighting, LED (Standard body) | 81 |
| | MP-C | Small LED Signal Tower | ϕ30, | Lighting, LED (Standard body),M12 Connector Type | 83 |
| | MPS | Small LED Signal Tower | ϕ30, | Lighting,LED(Short body) | 81 |
| | MPS-C | Small LED Signal Tower | ϕ30, | Lighting,LED(Short body),M12 Connector Type | 83 |
| N | NBM-D88NN | Interface Converter | Ethernet | | 49 |
| | NE | Small LED Signal Light | ϕ57, | Lighting, LED | 99 |
| | NE-M1-CL7 | Multi-color LED Signal Light | ϕ57, | Lighting, LED (7 Colors) | 100 |
| | NHL-FB2/FV2 | Network Monitor Signal Tower | ϕ60, | Lighting/Flashing, Audible Alarm (FB2) / Voice, Audible Alarm (FV2) | 41,42 |
| | NHP-FB2/FV2 | Network Monitor Signal Tower | ϕ40, | Lighting/Flashing, Audible Alarm (FB2) / Voice, Audible Alarm (FV2) | 41,42 |

# Product Index


| | Model | Model Name | Specifications | Page |
|---|---|---|---|---|
| P | PES-A | Small LED Signal Light | ϕ82, Continuous/Flashing | 101 |
| | PEW-A | Small LED Signal Light | ϕ82, Continuous/Flashing | 102 |
| | PEW-AB | Small LED Signal Light | ϕ82, Continuous/Flashing, Buzzer | 102 |
| | PFH-BT | Battery-powered Flash Signal Light | ϕ100, Flashing, Portable, Magnet Mounting | 108 |
| | PHC-D08N | Interface Converter | Contact Output 8 points | 51 |
| | PHE-3FB3 | Interface Converter with Signal Light | ϕ40, USB/RS-232C Lighting/Flashing, Buzzer | 48 |
| | PSE | Small LED Flash Signal Light | ϕ82, Flashing | 105 |
| R | RFT | Audible Alarm with LED Revolving Light | □115, 32 sounds | 166 |
| | RFV | MP3 Voice Annunciator with LED Revolving Light | □115, MP3 Voice Synthesizer, 63 seconds | 168 |
| | RH-A | Small Revolving Light | ϕ100 | 121 |
| | RH-AUL | Small Revolving Light | ϕ100, UL | 121 |
| | RHB-A | Small Revolving Light | ϕ100, Audible Alarm | 121 |
| | RHB-AUL | Small Revolving Light | ϕ100, Audible Alarm, UL | 121 |
| | RHE | Small LED Revolving Light | ϕ100, LED | 116 |
| | RHEB | Small LED Revolving Light | ϕ100, LED, Audible Alarm | 116 |
| | RLE | Compact LED Revolving Light | ϕ82, LED | 115 |
| | RLR | Extreme Vibration Resistant Large LED Revolving Light | ϕ162, LED | 119 |
| | RS | Compact Revolving Light | ϕ82 | 120 |
| | RT-A/C/D/E | Horn Speaker Audible Alarm with Revolving Light | Revolving Light, 32 built-in Melody/Alarm sounds | 160 |
| | RT-VF | Horn Speaker Voice Annunciator with Revolving Light | Revolving Light, MP3, 63 seconds | 162 |
| | RU | Compact Revolving Light | ϕ82 | 120 |
| | RUP | Compact Revolving Light | ϕ82, Mounting Pole | 120 |
| S | SKC-A | Large Revolving Light | ϕ187 | 127 |
| | SKH-A | Small Revolving Light | ϕ118 | 122 |
| | SKH-EA | Small Revolving Light | ϕ100 | 124 |

# Product Index


| | Model | Model Name | Specifications | Page |
|---|---|---|---|---|
| S | SKHB-A | Small Revolving Light | ϕ118, Audible Alarm | 122 |
| | SKHE | Small LED Revolving Light | ϕ118, LED | 118 |
| | SKHEB | Small LED Revolving Light | ϕ118, LED, Audible Alarm | 118 |
| | SKL-CA | Large Revolving Light | ϕ162 | 126 |
| | SKL-SA | Large Revolving Light | ϕ162, Stainless Steel | 126 |
| | SKP-A | Medium Revolving Light | ϕ138 | 125 |
| | SPB-2E | Speaker | 2W 8Ω | 186 |
| | SPB-5E | Speaker | 5W 8Ω | 186 |
| | SPL-5E | Speaker | 5W 8Ω | 186 |
| | SPW-5E | Speaker | 5W 8Ω | 186 |
| | ST-PA-LR6 | Explosion-Safe Signal Tower | ϕ60, Lighting/Flashing | 21 |
| | SZ-☐ | Optional Parts | | 183 to 185 |
| W | WDR-LE-Z2 | Wireless, Data Aquisition System | Mounted receiver (outside Japan) | 35, 37 |
| | WDT-5LR-Z2 | Wireless, Data Aquisition System | LR5 Signal Tower Transmitter | 35 |
| | WDT-6LR-Z2 | Wireless, Data Aquisition System | LR6 Signal Tower Transmitter | 35 |
| | WDT-5E-Z2 | Wireless, Data Aquisition System | LE Signal Tower Transmitter | 37 |
| | WDT-6M-Z2 | Wireless, Data Aquisition System | LME Signal Tower Transmitter | 37 |
| | WE | Wall-Mounted LED Signal Tower | Lighting, LED (Chromium-plated Body) | 90 |
| | WE-FB | Wall-Mounted LED Signal Tower | Lighting/Flashing, LED, Audible Alarm (Chromium-plated Cover) | 90 |
| | WEP | Wall-Mounted LED Signal Tower | Lighting, LED (Light-gray Body) | 90 |
| | WEP-FB | Wall-Mounted LED Signal Tower | Lighting/Flashing, LED, Audible Alarm (Light-gray Cover) | 90 |
| | WH-A | Wall-Mounted Small Revolving Light | ϕ100, Wall-mount | 123 |
| | WHB-A | Wall-Mounted Small Revolving Light | ϕ100, Audible Alarm, Wall-mount | 123 |
| | WME-D | Wall-Mounted LED Signal Tower | Lighting, LED | 93 |
| | WME-DFB | Wall-Mounted LED Signal Tower | Lighting/Flashing, LED, Audible Alarm | 93 |
| X | XME | Large LED Flash Signal Light | ϕ187, Flashing | 109 |
| | XPE | Medium LED Flash Signal Light | ϕ162, Flashing | 109 |

## ■ Electric machinery and equipment Protection rating symbols

JIS C 0920:2003 (IEC 60529:2001)

The International Protection grade code (IP) is followed by two numbers, with the first number as the symbol to represent the protection classification for human body and solid foreign matter from a number of 0 to 6; the second number as the symbol to represent the degree of protection against permeation of water as a number from 0 to 9.

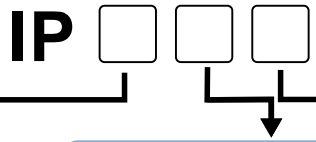


| First classification number<br>Protection rating for humans and solid foreign matter | Code No. | Second classification number<br>Protection rating for water |
|---|---|---|
| No protection | 0 | No protection |
| It is protection against solid foreign matter (a pole,as an example) larger than 50mm or more in diameter. | 1 | It protects against water droplets falling vertically. |
| It is protection against solid foreign matter (a finger, as an example) larger than 12.5 mm or more in diameter. | 2 | It protects against water droplets falling vertically, even if the product is tilted within a 15 degree angle. |
| It is protection against solid foreign matter (a tool, as an example) larger than 2.5mm or more in diameter. | 3 | It protects against water sprayed from up to a vertical angle of 60 degrees. |
| It is protection against solid foreign matter (wire, as an example) larger than 1.0 mm or more in diameter. | 4 | It protects against water splash from all directions. |
| Dust-proof type: Although completely preventing dust intrusion is impossible, the amount of dust invasion will not hinder the predetermined operation and safety of the electronic device. | 5 | It protects against a water jet stream (sprayed from a nozzle in all directions). |
| Dust resistant type: dust intrusion is completely prevented. | 6 | It protects against a powerful water-jet stream (sprayed from a nozzle in all directions). |
| | 7 | It protects against temporarily immersion in water. |
| | 8 | It protects against applications used in diving conditions specified by the manufacturer. |

■ Cautionary Notes
The IP rating stands for the grade of dust-proof and waterproof performance of the enclosure by itself. When using our products outdoors, be sure to refer to the product specifications for each product in order to select the appropriate installation location and mounting direction.

| Supplementary Character | |
|---|---|
| F | Oil-proof type: It is not harmfully affected by contact of oil droplets or oil shavings from any direction. |
| G | Oil resistant type: Oil drops and oily grease does not enter inside from any direction. |

### What is IPX9K?

IPX9K is the German DIN 40050 PART9 standard,defined as a protection that is regulated for high-temperature and high-pressurized water.
Water is heated up to 80℃ and then sprayed at a water pressure in the range of 80 to 100 BARs at 14 to 16 liters per minute towards the test object.
The test object is between a distance of 100 to 150 mm from the nozzle and sprayed in all directions at 0, 30, 60, and 90 degrees; then sprayed at a horizontal angle while it is being rotated, all done for a period of 30 seconds without being affected by water penetration.

## ■ UL Standard

Underwriters Laboratories Inc. (UL) is a nonprofit organization established by the National Fire Insurance Company Conference, which is an association of the American fire insurance companies in the United States since 1894.
At UL, in order to safely protect human life and property from fire, theft, or other accidents, tests are conducted on materials and parts and conduct certification work to measure the safety of products through a follow-up service. The UL mark shown on the product indicates that UL has tested and evaluated the sample of the product and judged that it conforms to UL requirements.

## ■ CE Marking

CE marking refers to a common European law called the New Approach Directive enacted by the European Commission (EC), which requires products with essential requirements for each directive to comply with requirements for the user's health and the protection of the product's safety.
Product manufacturers and importers must conduct conformity assessments before products are launched or used within the EU borders and only products satisfying them are granted the CE markings. The EN (European Norm) standard has been issued as a criterion for evaluating that each directive is satisfied.
(Source originally quoted from the Japan Standards Association published guide for CE marking for electric, electronic and mechanical workers)
The main directives are also applied to our products.

1. Low Voltage Directive
Applicable to equipment that operates at rated voltages from 50V AC to 1000V AC and DC 75V to 1500V; in which it is required to protect the equipment from dangers caused by electricity. (Compatibility specification example: EN60598-1)

2. EMC Directive
The electromagnetic compatibility (EMC) directive is established to regulate both electromagnetic noise emissions, which adversely affects other devices, and noise immunity against electromagnetic noise emitted from other devices, in accordance with their directive. (Compatibility specification example: EN61000-6-4, EN61000-6-2)

# IoT Solutions from the

Manufacturing Site

Surveillance Camera A

Production Line

Factory Operations

Surveillance Camera B

## Visualize Work Progress

Work progress can easily be assessed with the LA6 series' programmable internal timer function to display progress.

LA6 Series

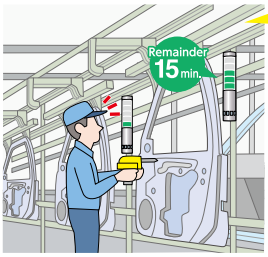


Reduce variation loss by visualizing work progress

■ Display remaining work time with the number of tiers.

## Wirelessly Acquire Equipment Data

Attach our transmitters to existing PATLITE Signal Towers to wirelessly collect equipment data. The software can organize the collected data and improve productivity and efficiency, reduce bottlenecks, etc.

WD-Z2 Series

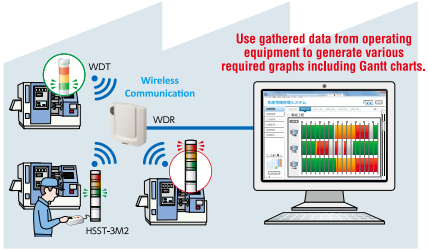

HSST-3M2

## Network Existing Equipment

Improve response time by converting your existing equipment to network enabled devices capable of notifying remote personnel via e-mail.

● Manufacturing Site

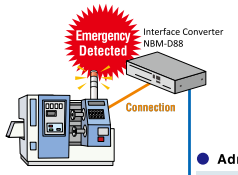


● Administration Office

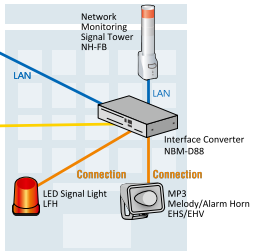

# Factory to the Office

## Camera System Fault Detection

Monitor surveillance equipment in order to quickly respond to failures and abnormalities.

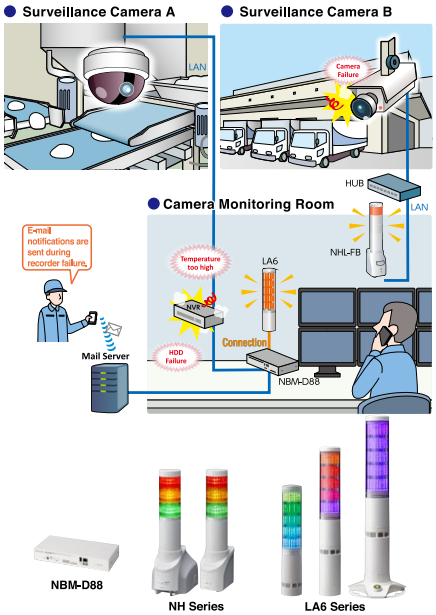


## Communicate Across Multiple Locations

The LA6-POE is capable of mirroring other LA6-POE devices over an Ethernet connection. By utilizing this function, equipment information is visually communicated in other remote locations.

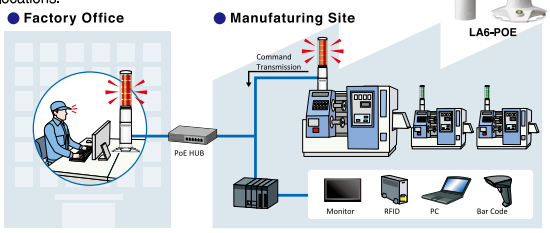


## Notify Remote Personnel in Real-time

Create a smoother, more efficient customer service experience by notifying remote administrators of status in the call center.

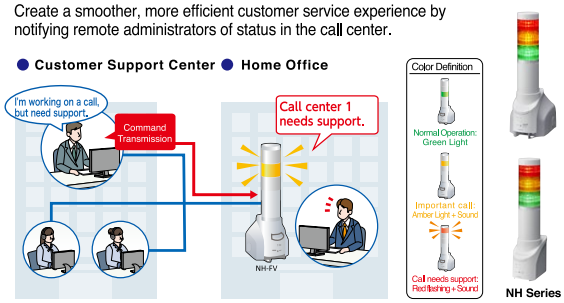


## Remotely monitor server errors

Be notified immediately of server errors or failures with light, alarm or remotely by e-mail.

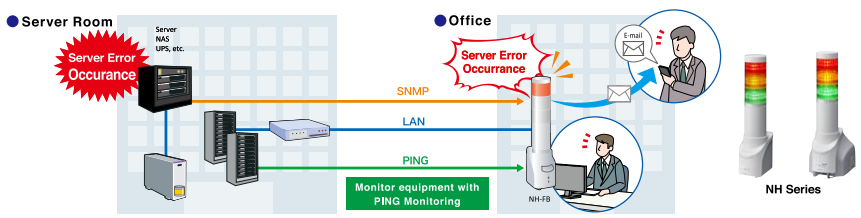

# LA6 SERIES

**Programmable LED Signal Towers**

Color Change | Level Meter Monitoring | Status Condition | Cycle Time | Remote Monitoring | Ethernet PoE

## The first PC programmable Signal Tower with unlimited possibilities

### 60mm Smart Signal Tower

- DC24V/ 5 Tier Type
- AC 100-240V/ 5 Tier Type

**LA6**

11 Sounds | Open Collector | LED 21 Colors | IP65 | IP54 (Buzzer) | 85 dB at 1 m

Silver Lighting Type

Off-white Flashing /Buzzer Type

### 60mm Smart Signal Towers with PoE

Direct Mount Type

**LA6-5DTNWB-POE**

Stationary Type w/"Clear" Switch

**LA6-5DSNWB-POE**

Easy WEB | PoE | Mirroring | Modbus/ TCP | Socket | LAN | 85 dB at 1 m | 11 sounds | LED 21 Colors | IP54 (Direct Mount) | HTTP

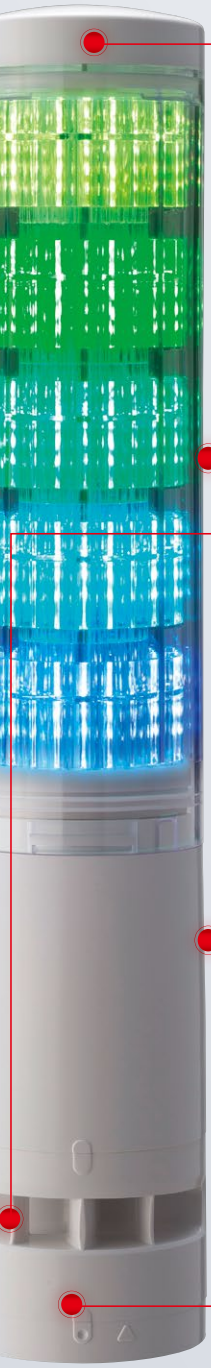

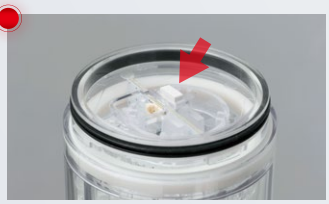

**Multi-function Switch for various setups**

Audible Alarm SOUND SETUP
The built-in switch has four selectable settings for "Loud" (about 85dB) -> "Middle" (about 80dB) -> "Low" (about 75dB) -> "Off".

COLOR SETUP
The built-in switch can also allow a manual selection of 9 colors to be set for each tier.

**A new lens design optimizes visibility.**

The newly developed lens design efficiently diffuses LED light so that it is unmistakably visible, even from great distances.

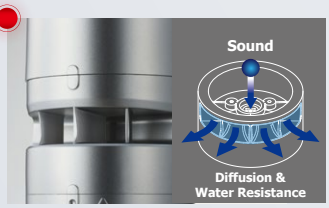


**The Audible Alarm has a total of 11 sounds to match various applications.**

A newly developed compact loudspeaker not only can transmit a clear sound of 85 dB (at 1m), but also has added water resistance. A different alarm sound can be set up with each display pattern when in the Smart mode. (Only three of the 11 alarm patterns are selectable in the Signal Tower mode)

**Use the free editing software to freely change the LA6 colors and patterns.**

Upload colors and patterns to the signal tower via a USB cable.*
* The USB cable is sold separately (USB microB type with Charging/ Data Transfer capability).

**Detachable Terminal Block**

Equipped with 8 inputs for connecting wires or a PLC. I/O data can be recorded and stored over the network. DC power can also be supplied through the terminal block.

Ethernet PoE

**Conveniently connects to an existing network with PoE support.**

PoE (Power over Ethernet) is a technology which lets network cables carry electrical power. PoE can bring many advantages, such as reducing costs of installing electrical cabling, by connecting it with a HUB supporting PoE, or have the flexibility of not having to be tethered to an electical outlet.

### LA6-POE Communications Protocols

**SOCKET Communication**

An application-level protocol called PNS (developed by PATLITE) can be used to establish connection between client and server and to control visual and audible alert functions.

**HTTP (Hypertext Transfer Protocol)**

HTTP commands sent through a web browser or PLC can trigger visual and audible alert functions.

**Modbus TCP/UDP --remove images**

Modbus, a vendor-neutral protocol, can be used to control visual and audible alert functions through a PLC.

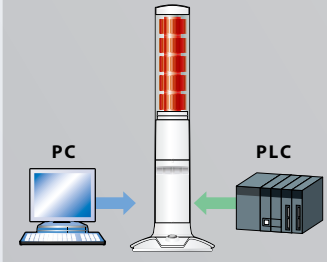

## Network Monitoring Signal Tower with MP3

# NHL-3FV2
# NHP-3FV2

- Audible Alarm and MP3 voice alert functions
- Built-in digital output and contact inputs
- Monitor network device status using SNMP protocol
- Able to send email alerts

Lights Off

Wall-mount Bracket
**NH-WST2**

| | | |
|---|---|---|
| Easy WEB | PING | EMAIL |
| SNMP v1 / v2c | RSH | SLMP |
| Socket | LAN | MP3 |
| 88 dB at 1 m | 10 Sounds | 60 Messages |
| 4 Inputs | 1 Output | Line out |
| NHL ϕ60mm | NHP ϕ40mm | HTTP |

## Network Monitoring Signal Tower

# NHL-3FB2
# NHP-3FB2

- Designed to compliment office spaces
- Up to 5 LED units with 2 types of flashing patterns
- 4 audible alarm sound types

Lights Off

Wall-mount Bracket
**NH-WST**

Partition-mount Bracket
**NH-PST**

| | | |
|---|---|---|
| Easy WEB | PING | EMAIL |
| SNMP v1 / v2c | RSH | SLMP |
| Socket | LAN | 80 dB at 1 m |
| 4 Sounds | NHL ϕ60mm | NHP ϕ40mm |
| HTTP | | |

## Monitoring Functions

### PING Monitoring

A maximum of 24 nodes is possible when monitoring critical status information. When an abnormality occurance in the monitored equipment network isn't obtained, the detected abnormality warns the administrator promptly with light and sound.

### TRAP Monitoring

With the TRAP Monitoring function, the NHL alerts administrators to any equipment abnormalities within the IP network that uses SNMP.

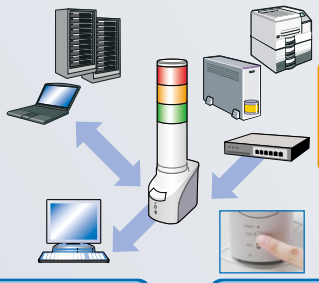

- It can distinguish the variable-bindings.
- Registration of 16 groups (4 nodes per group ) is possible.

### Application Monitoring

Monitor important background applications and signal the administrator upon any detected abnormalities.

### Self-diagnosis Function

For peace of mind, manually test operation functions with the conveniently located test button.

## Communication Commands

### RSH

**Controllable with RSH**

The NHL is easily controllable by Remote Shell (RSH) commands, which is a flexible protocol.

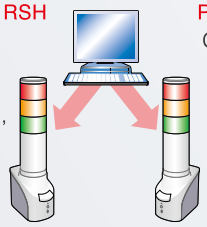

NHL-FB / NH-FV Series
Event Occurance: Command Execution, (Red/Amber/Green Lighting, Buzzer sounds)
RSH:
rsh 192.168.10.1 -l root alert 111001

NH-FV Series
Event Occurance: Command Execution, (Ch10 Message Playback)
RSH:
rsh 192.168.10.1 -l patlite sound 10

### SOCKET Transmission

**PHN Command Compatibility**

Controlled with 2 bit commands.

※ Some functions are limited.

Event Occurance: Command Execution, (Red/Amber/Green lighting, Buzzer sounds)
PHN Command: 57H, 17H

**PNS Command Compatibility**

※ The PNS command is a unique command from PATLITE.

Control all pattern information by using the PNS commands.

NHL-FB / NH-FV Series
Event Occurance: Command Execution, (Red/Amber/Green lighting, Buzzer sounds)
PNS Command: 58H,58H,53H,00H, 00H,06H,01H,01H,01H,00H,00H,01H

NH-FV Series
Event Occurance: Command Execution, (Ch10 Message Playback)
PNS Command: 58H,58H,56H,00H, 00H,04H,01H,00H,00H,10H

# DIRECTLY TRIGGERED AND POWERED VIA USB INTERFACE

- PC and HMI controlled
- Powered over USB for single cord installation
- Open architecture for custom programming
- Compatible with Windows® and Linux

## Single Cable Installation

USB cable* transmits power and data

* USB cable is not included with this product.

## Downloadable* Software Library

Simple to Program

* Download from our website.

Compatible LED Units

LR6-E-R/Y/G/B/C

LR6-E-RZ/YZ/GZ/BZ

LR6-E-MZ

*Supports up to 5 LED units total
*LR6-E-MZ can be used with any other LED unit types

LR6-3USBW-RYG
LR6-3USBK-RYG

LR6-USBW
LR6-USBK

## Mounting Options

SZK-003W/K

SZ-016A

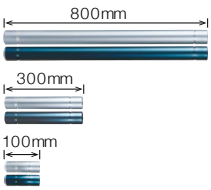


POLE-100/300/800A21(K)

SZP-004W/K

SZ-010

# Ideal for Factory Automation, Unique Solutions for USB Connections

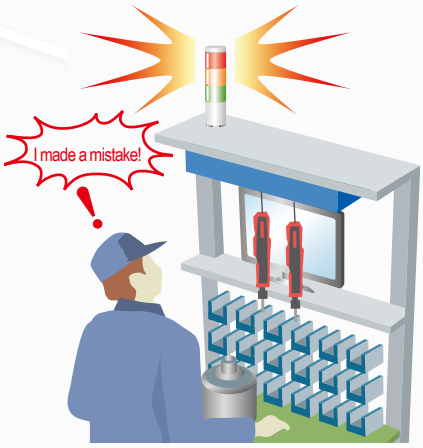


## Production line

With this easy-to-use and understand signal tower, you can alert and notify users about what is happening on the production lines.
The signal tower connects to a production line PC with a single USB cable. Working with a program to determine OK or not good, or situations where material is out or a button on the touch panel is pressed, you can control flashing LED units or sound the buzzer.

A software library (for Windows®) is available, enabling easy construction of programs. Even on other operating systems, possible for control based on protocol specifications.
The signal tower can be used for various purposes, such as notifying managers or warning operators.

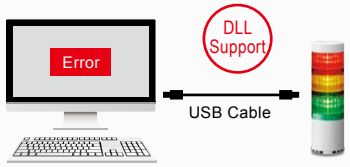


PC, panel computer, and so on

LR6-USB

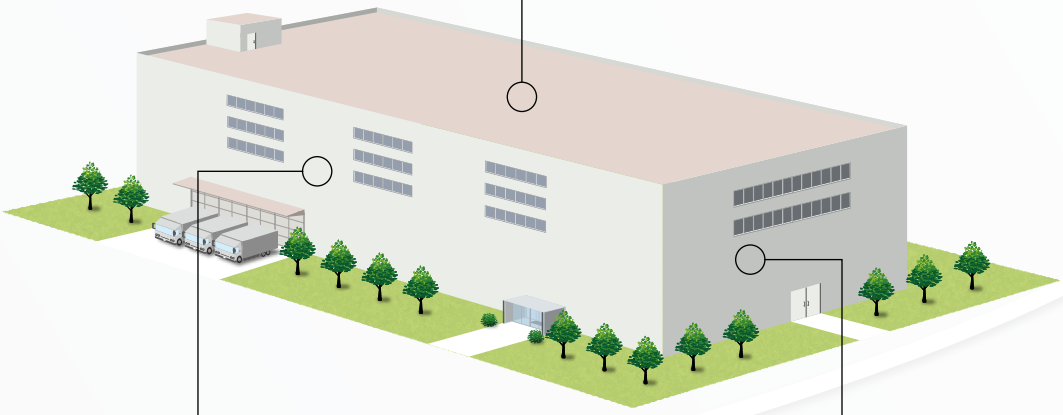

### Work with PC in an office

### Site visualization solution

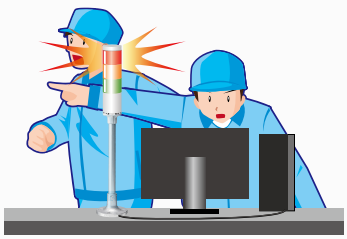

### Installed on equipment

### Work with PC-controlled equipment

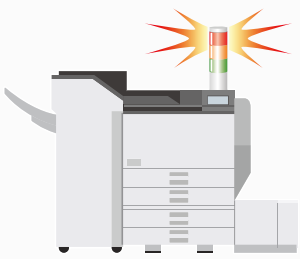

# Make Smarter, Data-Driven Decisions

**Any manufacturer**

**Any year/model**

**Wireless communication means wiring is unnecessary**

**1** Acquire real-time machine data regardless of machine brand or age

**2** Easy installation and setup

**Receiver**
WDR-LE-Z2

Wirelessly transmit critical equipment data

LAN

**3** Export data to CSV file for detailed analysis

**Transmitter**
WDT-6LR/5LR-Z2

Red:Abnormal Stop Amber:Operator Call Green:Normal Operation

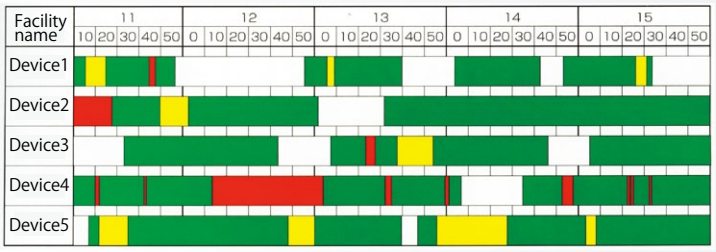

Centralize operations management

Monitor performance across multiple locations

Increase plant-wide visibility

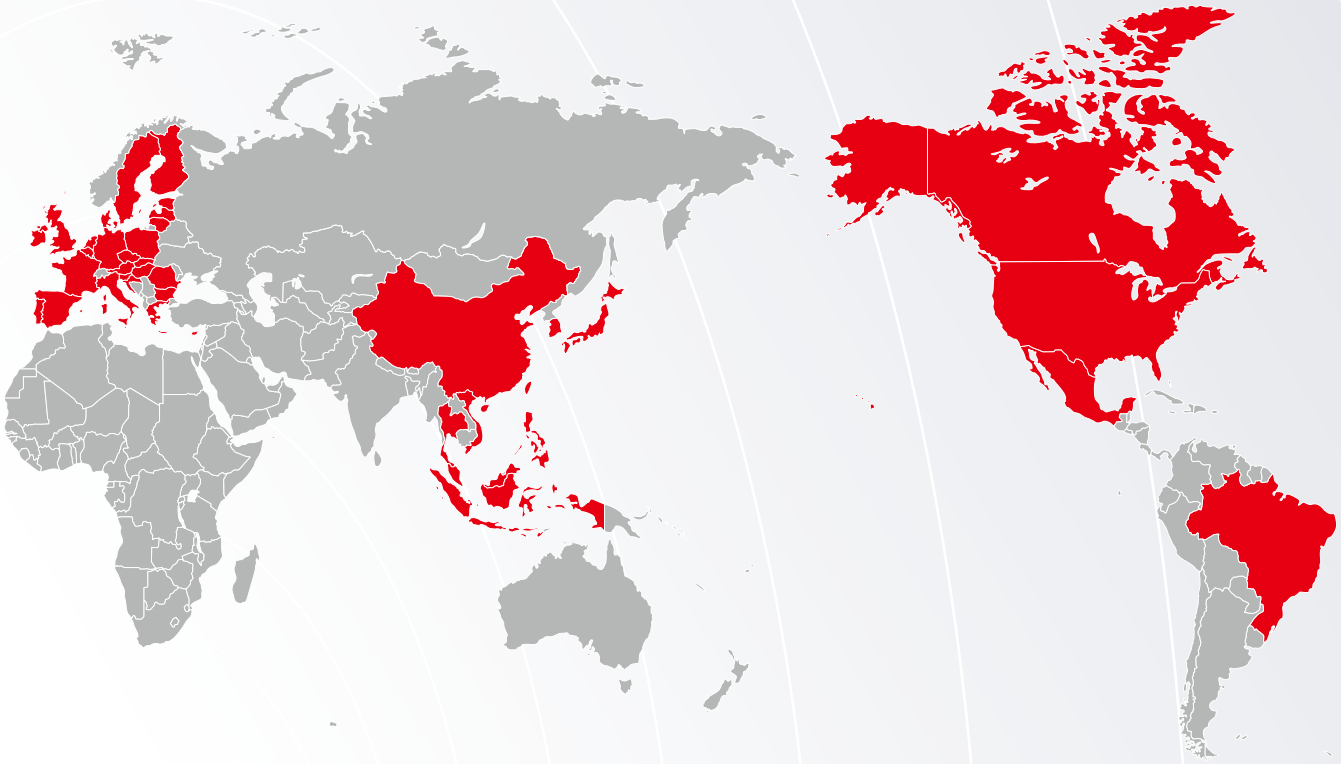

**Installed in**

**Over 1,000 facilities**

**Supported in**

**Over 10 countries**

For details, see page 35-

## Transmitter

Signal Tower
LR6 Transmitter
WDT-6LR-Z2

Signal Tower
LR5 Transmitter
WDT-5LR-Z2

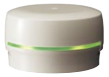

Signal Tower
LME Transmitter
WDT-6M-Z2

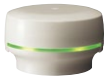

Signal Tower
LE Transmitter
WDT-5E-Z2

## Receiver

Stationary Receiver
WDR-LE-Z2

# Next Evolution of Signal Towers

## Visibility

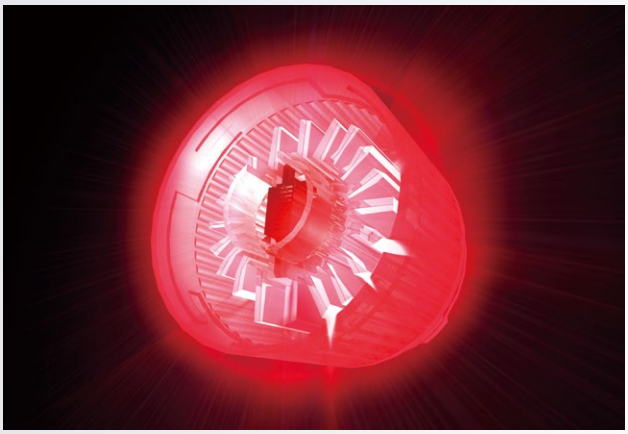

### A uniform 360° Light-Emitting Design

The new LED color module features a unique interior lens construction that achieves a fuller, more uniform 360° degree light output. Light color is vibrant with more emission area for reliable indication from farther distances.

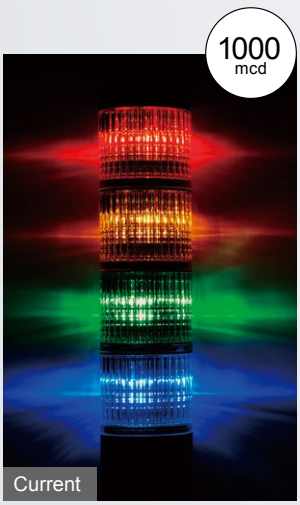


LCE-A Series (ϕ40)

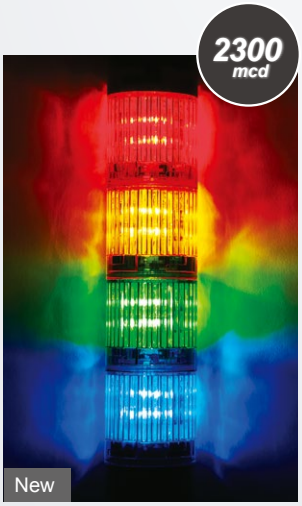


LR4 Series (ϕ40)

### More than twice the light output * Based on the ϕ40 Red LED Model

The LR Series lenses distribute light more efficiently, more than doubling the luminous intensity of previous models.

## Audibility

### Unique, Fully-enclosed Sound Module

Inspired by the structure of a drum, the new sound module is completely enclosed. This allows the sound waves to be distributed more efficiently, producing an even, 360° sound resonance. The enclosed design also improves the resistance to water and dust.

* According to our research, December 2018

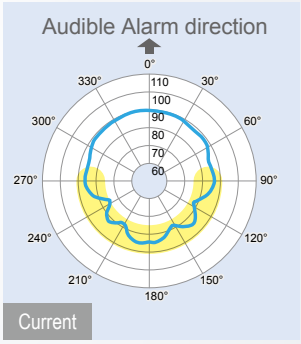


LHE Series (ϕ70)

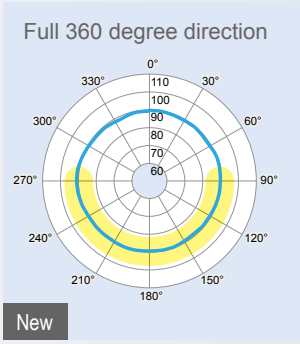


LR7 Series (ϕ70)

### Maximum 90dB※ output * LR7 Series Buzzer #4 Sweep sound

The fully enclosed sound module structure produces more efficient sound, up to 90dB, at 1 meter.

* LR7 Buzzer No.4 (Sweep tone)

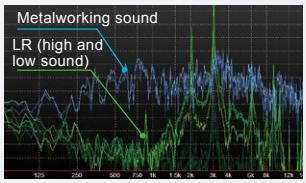


[Buzzer #3] High pitch (fast alternating intermittent)
2016Hz/3012Hz

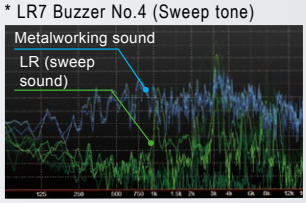


[Buzzer #4] Sweep sound
1000Hz - 4032Hz (variable)

### New Sounds Heard Above the Noise

Four Audible Alarm sounds* are built into the module. Audible Alarm sound No. 3 and No. 4 are newly developed with a higher variable frequency to be heard above the noise of surrounding machinery. A sound reduction function is also built-in to reduce the buzzer volume by approximately 10dB to suit the environment.

* Four Audible Alarm Sounds
No.1:Rapid Intermittent sound No.2:Continuous sound No.3:Rapid Hi-Low
No.4:Sweep sound

# LR Series Model Conversion

As of September 2017, production of legacy models have completed.

Previous product

| LCE-A | LCS-A | LE | LES | LU5 | LME | LMS | LHE | LU7 |
|---|---|---|---|---|---|---|---|---|
| ϕ40 | | ϕ50 | | | ϕ60 | | ϕ70 | |

New product

| LR4 | LR5 | LR6 | LR7 |
|---|---|---|---|
| ϕ40 | ϕ50 | ϕ60 | ϕ70 |

## Simplicity

### Reorganizing modules is effortless

Traditional stack lights typically require additional threaded shafts or tools to reconfigure light modules. The LR Series makes it easier than ever to change the number of light tiers or to add a sound module.

■ LED/Buzzer Unit Removal

■ LED Unit Attachment

### Modular System Design

The fully modular allows the flexibility to change the LR to match any changes in the application. Also, in case a module is damaged, it can quickly be replaced.

Easy assembly/disassembly

Scan to see this in action

## Durability

### Smooth surface

The modules and body unit all line up flush, creating a smooth surface for improved water run off and easy cleaning.

### Environmental Performance

The LR Series is built resistant to water and dust, carrying IP65 (NEMA Type 4X, 13*) protection ratings.

Cable wire included

*[Type 4X] Protection against damage from corrosion, rain, foreign mattar, water spray, water injection, and ice formation to the outer housing.
[Type 13] Housing for indoor use. Protection from dust, water spray, oil and non-corrosive coolant.

# Explosion Proof products

# Various Applications for Explosion Proof and Harsh Environments

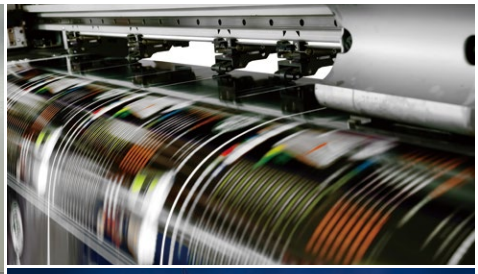

| Branch | Explosion Hazard |
|---|---|
| Power Generation Companies | ● Lump Coal Dust |
| Woodworking Industry | ● Saw Dust ● Fine Wood Chips |
| Metal-work Operations | ● Explosive Metal Dust ● Spark-ignitable Metal Dust |
| Food/Beverage Industry | ● Ignitable Grain Dust ● Explosive Sugar Dust |
| Refinery Industry | ● Hydrocarbons close to their flash-points ● Oil Processing Plants |
| Waste Disposal Companies | ● Waste-water Treatment Gases |
| Landfills/Civil Engineering | ● Flammable Landfill Gases ● Uncontrolled Gas Emissions<br>● Flammable Gas from poor ventilation sources |
| Pharmaceutical Industry | ● Alcohol Solvents ● Materials explosive when mixed |
| Gas Suppliers | ● Natural Gas Leakage ● Natural Gas Emissions |
| Paint-spraying Operations | ● Overspray in Spray-paint Bays ● Solvent Vapor Emissions |
| Recycling Operations | ● Unemptied flammable gas/liquid containers<br>● Biodegradable Material Emitting Explosive Gases |
| Chemical Industry | ● Flammable Gases ● Flammable Liquids ● Flammable Solids |
| Agriculture | ● Bio-gas Production Plants ● Bio-gas Located on Farms |

# ST-PA-LR6

ST-PA-LR6-02 ST-PA-LR6-M2

Wall Mount

Horizontal Mount

## Descriptions

The ST-PA Explosion Proof Signal Tower Series features 5 ultra-bright, maintenance-free LED units and contained in a flame and dust proof housing.

## Features

- Housing: Aluminum alloy
- Glass: Borosilicate glass
- Terminals: Easy wiring access from bottom door
- Mounting: Upright, Wall Mount, Vertical-mount, and Horizontal Mount.
- Voltage: 24V DC, 100-240V AC are available.
- Wire core size: 0.5mm²~2.5mm², AWG20~AWG14

## ST-PA-LR6 is covered by the specifications shown in the shaded areas below

| Country | Area Classification | Classification of hazardous areas | | | Patlite Model ST-PA-LR6 | | |
|---|---|---|---|---|---|---|---|
| | | Constant Exposure | Occasional Exposure | Rare and Temporary | Conformity hazardous areas | Explosive atmosphere | Certification authority |
| Europe | ATEX Directive 94/9/EC | Zone 0 Zone 20 | Zone 1 Zone 21 | Zone 2 Zone 22 | Zone 1,2 Zone 21,22 | Gas Dust | EPS |

*The ATEX directive is a CENELEC standard.

## Specifications

| Type | ST-PA-LR6502WJBWRYGBC | ST-PA-LR65M2WJBWRYGBC |
|---|---|---|
| Rated voltage | 24V DC (PNP/NPN No Polarity) | 100-240V AC |
| Operating temp. | ATEX Directive:-20°C～+50°C (no ice) | |
| Lighting pattern | Flashing (60±12 flashes per minute) / Continuous lighting | |
| Protection Rating | IP66 | |
| Mounting type | Outdoor & Indoor | Upright & Sideways |
| Mass (Main body) | 5.7kg | 6.7kg |
| Cable | 10m Cable 10×0.75mm² | 10m Cable 12×0.75mm² |
| Material | Upper & Lower case : Aluminum alloy<br>Glass case : Borosilicate glass<br>Bracket : Stainless steel | |

## Cerfitications

| | |
|---|---|
| Certifications | EPS 16 ATEX 1099<br>IECEx EPS 16.0046<br>TC-RU C-DE.ME92.B.00342 |
| Marking | Ex II 2G Ex db IIC T6/T5 Gb<br>Ex II 2G Ex tb IIIC T120°C Db |
| Standards | EN 60079-0, EN 60079-1, EN 60079-31 |
| Guideline | 2014/34/EU |
| Production Certification | EPS 13 ATEX Q 594 |
| CE | CE 2004 |

# Testing Authority EPS

## Dimensions (mm)

■ ST-PA-LR6

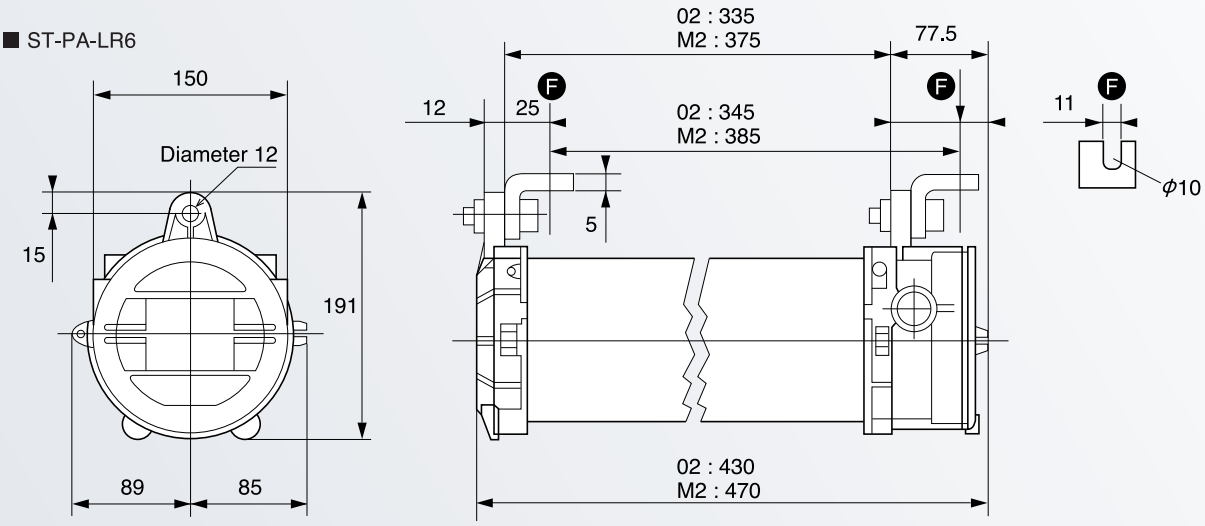


(Unit: mm)

## Wiring Diagram

### ■ The colors are wired to table

| Color of wire of signal tower | Wire no. of linebushing ST-PA-LR6-02 | Wire no. of linebushing ST-PA-LR6-M2 |
|---|---|---|
| Red (Light) | R : 1 | R : 1 |
| Orange (Light) | O : 2 | O : 2 |
| Green (Light) | G : 3 | G : 3 |
| Blue (Light) | B : 4 | B : 4 |
| White (Light) | W : 5 | W : 5 |
| Violet | Buz : 6 | Buz : 6 |
| Green/yellow | PE | PE |
| Yellow | PWR+ : 7 | Light COM : 7 |
| Brown | Flash COM : 8 | Flash COM : 8 |
| Grey | PWR- : 9 | PWR~ : 9 |
| Black | | PWR~ : 10 |
| | | n.c. 11 |

### ■ Internal Connection

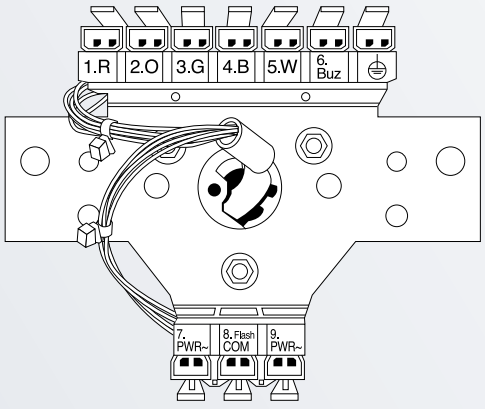


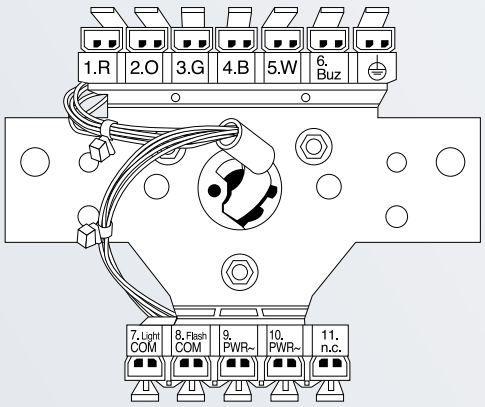

CE Ex II 3 G Ex nA IIC T4 Gc, II 3 D Ex tc IIIC T80°C Dc IP65 2014/34/CATEX: EN 60079-0:2012 / A11:2013, EN 60079-15:2010, EN 60079-31:2014

# Ø40mm Signal Towers

The LR-EX Signal Tower Series features up to five LED segments tightly secured together with screws to ensure compliance with certifications and to prevent tampering or loosening from continuous vibration. Each ultra-bright, maintenance free, LED unit is designed with intricately cut lenses with a double-reflection system to produce even, brilliant, light output, visible from further distances. The lenses and body structure is dust and water tight and constructed from durable polycarbonate to withstand harsh environments.

Side mount bracket 1/2 inch NPT

Two types of mounting available

screws tightened

## FEATURES

- Suitable for Zone 2 and Zone 22 applications
- CE compliance in accordance with ATEX
- Fully-enclosed sound module with 4 built-in sounds
- IP65 protection rating

## OPTIONS

- 1/2" NPT pole mount or direct mount adapter
- Wall mount brackets

## Dimensions (mm)

Signal Tower

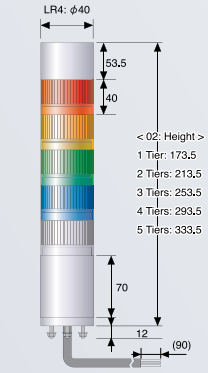


WALL MOUNT BRACKET

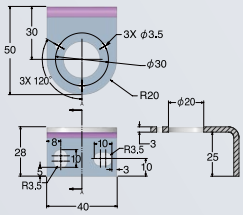


1/2" NPT ADAPTER TYPE

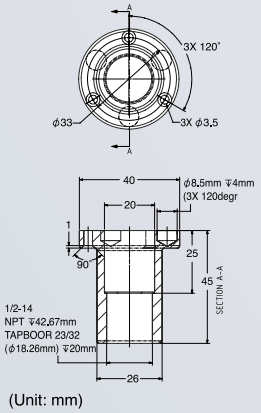


(Unit: mm)

## Specifications

| | |
|---|---|
| Explosion-safety | CE Ex II 3 G Ex nA IIC T4 Gc, II 3 D Ex tc IIIC T80°C Dc IP65 |
| CE conformities | EN 60079-0:2012 / A11:2013, EN 60079-15:2010, EN 60079-31:2014 |
| Certification | EC-Declaration of conformity |
| Ambient Temperature | -20 °C to +50 °C |
| Ingress Protection | IP65 to EN 60529 |
| Material | Polycarbonate |
| Lighting Source | A Uniform 360° Light-Emitting Design |
| Acoustical Source | 85 dB (at 1m) with 4 sound options |
| Rated Voltage | 24V DC (PNP/NPN No Polarity) |
| Module Colors Available | Red, Amber, Green, Blue, Clear/white |
| Cable | Jacketed cable, Ø8mm, 3m length |

CURRENT RATINGS

| LED | | BUZZER | |
|---|---|---|---|
| Signal Line Current | | Signal Line Current | Inrush Current |
| Red, Amber | Green, Blue, Clear | | |
| approx. 40 mA | | approx. 40 mA | approx. 250 mA |

Lighting 24V DC

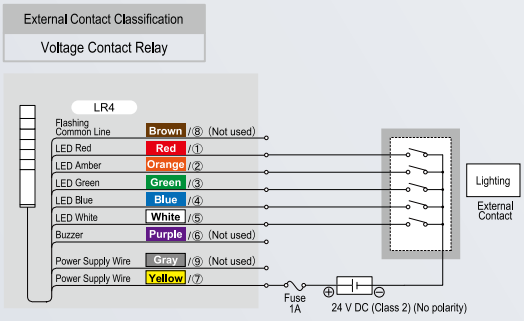


Lighting/Flashing/Alarm 24V DC

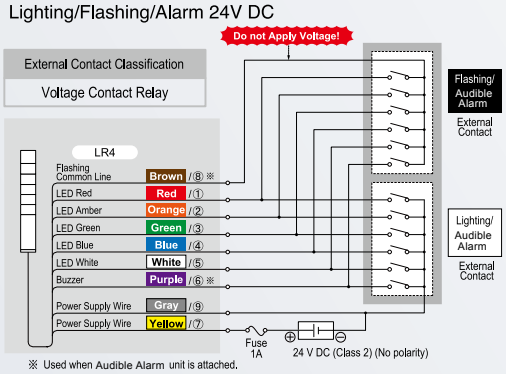


※ Used when Audible Alarm unit is attached.

## Model Code

**LR4-502WJBU-RYGBC-EX**

Tiers
1 - 5

Rated Voltage

| | |
|---|---|
| 02 | 24V DC |

Buzzer

| | |
|---|---|
| N | Continuous Lighting |
| B | Audible |

Bracket Code

| | |
|---|---|
| WJ | Wall Mount |
| NJ | NPT Adaptor |

LED Module Color

| | |
|---|---|
| R | Red |
| Y | Amber |
| G | Green |
| B | Blue |
| C | Clear / White |

(Top to bottom)

CE Ex II 3 G Ex nA IIC T4 Gc, II 3 D Ex tc IIIC T80°C Dc IP65 2014/34/(ATEX): EN 60079-0:2012 / A11:2013, EN 60079-15:2010, EN 60079-31:2014

# Ø60mm Signal Towers

The LR-EX Explosion Proof Signal Tower Series features up to five LED segments tightly secured together with screws to ensure compliance with certifications and to prevent tampering or loosening from continuous vibration. Each ultra-bright, maintenance free, LED unit is designed with intricately cut lenses with a double-reflection system to produce even, brilliant, light output, visible from further distances. The lenses and body structure is dust and water tight and constructed from durable polycarbonate to withstand harsh environments.

## ■ FEATURES

- Suitable for Zone 2 and Zone 22 applications
- CE compliance in accordance with ATEX
- Fully-enclosed sound module with 4 built-in sounds
- IP65 protection rating

## ■ OPTIONS

- 3/4" NPT pole mount or direct mount adapter
- Wall mount brackets

Side mount bracket　3/4 inch NPT

Two types of mounting available

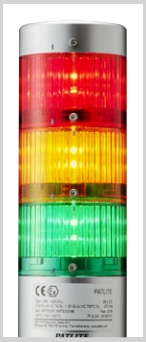

screws tightened

## Dimensions (mm)

Signal Tower

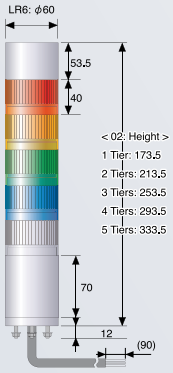


WALL MOUNT BRACKET

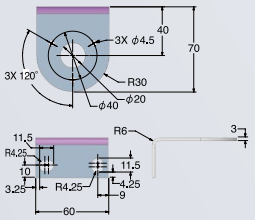


3/4" NPT ADAPTER TYPE

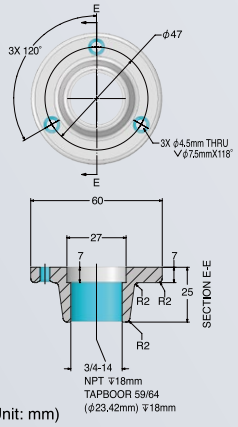


(Unit: mm)

## Specifications

| | |
|---|---|
| Explosion-safety | CE Ex II 3 G Ex nA IIC T4 Gc, II 3 D Ex tc IIIC T80°C IP65 |
| CE conformities | EN 60079-0, EN 60079-15, EN 61241-0, EN 61241-1 |
| Certification | EC-Declaration of conformity |
| Ambient Temperature | -20 °C to +50 °C |
| Ingress Protection | IP65 to EN 60529 |
| Material | Polycarbonate |
| Lighting Source | A Uniform 360° Light-Emitting Design |
| Acoustical Source | 85 dB (at 1m) with 4 sound options |
| Rated Voltage | 24V DC (PNP/NPN No Polarity) |
| Module Colors Available | Red, Amber, Green, Blue, Clear/white |
| Cable | Jacketed cable, Ø8mm, 3m length |

| CURRENT RATINGS | | | |
|---|---|---|---|
| LED | | BUZZER | |
| Signal Line Current | | Signal Line Current | Inrush Current |
| Red, Amber | Green, Blue, Clear | | |
| approx. 40 mA | | approx. 40 mA | approx. 250 mA |

Lighting 24V DC

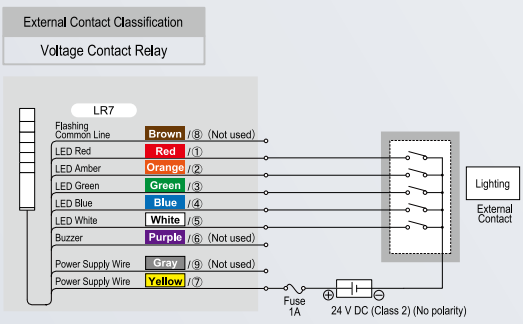


Lighting/Flashing/Alarm 24V DC

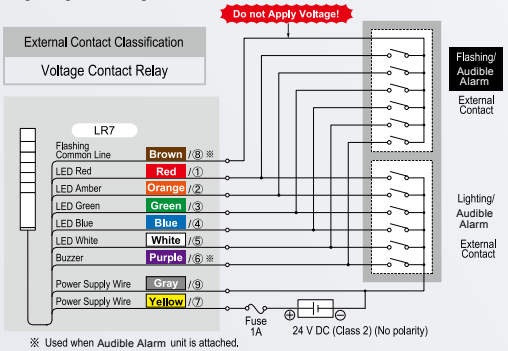


※ Used when Audible Alarm unit is attached.

## Model Code

**LR6-502WJBU-RYGBC-EX**

Tiers
1 - 5

Rated Voltage

| | |
|---|---|
| 02 | 24V DC |

Buzzer

| | |
|---|---|
| N | Continuous Lighting |
| B | Audible |

Bracket Code

| | |
|---|---|
| WJ | Wall Mount |
| NJ | NPT Adaptor |

LED Module Color

| | |
|---|---|
| R | Red |
| Y | Amber |
| G | Green |
| B | Blue |
| C | Clear / White |

(Top to bottom)

# LKEH-FE-EX, LKEH-FV-EX

Explosion Proof

CE Ex II 3GD Ex nA IIC T4 Gc, Ex tc IIIB T85°C Dc IP54 94/9/Ex(ATEX)CENELEC:EN 60079-0, EN 60079-15, EN 60079-31

## Ø100mm Signal Tower and MP3 Annunciator / Alarm Horn Hybrid

The LKEH-EX Hybrid Series features a combination of up to four ultra-bright LED segments, MP3 voice annunciation, and pre-loaded alarm sounds for highly-effective signaling and notification.

- Suitable for Zone 2 and Zone 22 applications
- CE compliance in accordance with ATEX
- Supports MP3 alerts up to 63 sec. (64kbit/s) with 5 selectable playback channels
- Comes pre-loaded with 32 tones and melodies
- Adjust playback volume from 0 to 105dB
- Field programmable with front loading SD card port
- Designed to withstand 2G vibrations
- NPN or PNP types available

LKEH
Wall mount Model

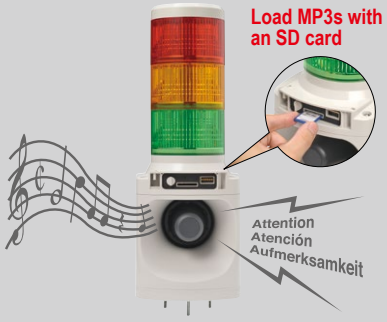


LKEH
Flush mount Model

## Dimensions (mm)

Model LKEH-FEW-EX, LKEH-FVW-EX

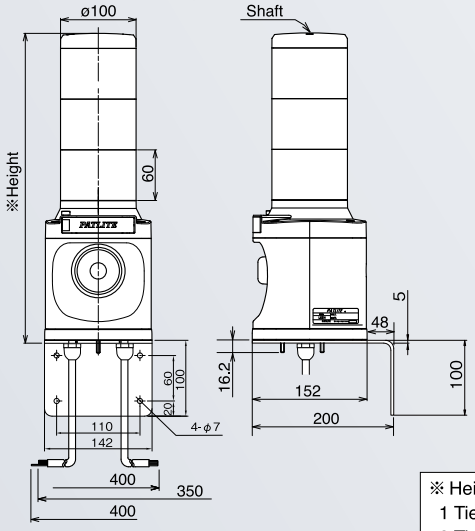


※ Height
1 Tier: 270
2 Tiers: 330
3 Tiers: 390
4 Tiers: 450

Model LKEH-FEF-EX, LKEH-FVF-EX

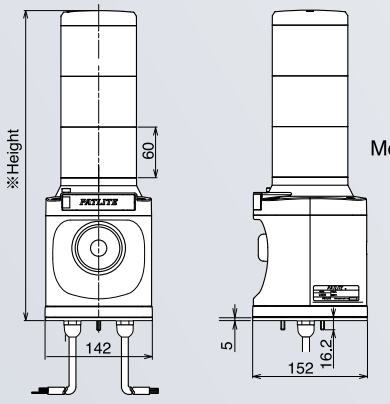


Mounting Dimensions

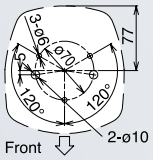


(Unit : mm)

## Sound Selection Charts

- Pre-recorded on model LKEH-FE-EX.
- 8 sounds can be played back by a bit input, and 32 sounds by binary input.

| | | | |
|---|---|---|---|
| Beep | Stutter + Bell | Inverted Revelle | Annie Laurie |
| Stutter | Synthesized Melody | Galactic Motor | London Bridge |
| Bell | Chime | Ringing Phone | Mary`s Lamb |
| Yelp | Call Sign | Two Tone | Camptown Races |
| Rapid Hi Lo | Train Ride | Alarm Clock | Amaryllis |
| Melody Chime | Galloping Hi Lo | Ringing Hi Lo | Symphony #40 |
| Synthesized Piano | Alien Chatter | Fur Elise | Ave Maria |
| Synthesized Bell | Falling Crystals | Minuet | Grandfather's Clock |

| Model | MP3 | Power |
|---|---|---|
| **LKEH-FEF-EX/LKEH-FEW-EX** | —— | 14.2W |
| **LKEH-FVF-EX/LKEH-FVW-EX** | Supports | 14.2W |

SD card(SD-2GP) for the model LKEH-FVF-EX and LKEH-FVW-EX sold separately.

## Model Code

**LKEH-302FVF-RYG-EX**

Model

Tiers
1~4

Type

| | |
|---|---|
| FV | MP3 Annunciator |
| FE | 32 sounds |

Mounting

| | |
|---|---|
| F | Flush mount |
| W | Wall mount |

Color

| | |
|---|---|
| R | Red |
| Y | Amber |
| G | Green |
| B | Blue |
| C | Clear / White |

(Top to bottom)

## Specifications

| Model | Rated Voltage | Voltage Range | MP3, Melody | Operating Temperature Range | Recordable Duration | Sound Pressure (at 1m) | Messages | Mass |
|---|---|---|---|---|---|---|---|---|
| **LKEH-FEF-EX** | 24V DC | 24VDC±10% | Type-E | -10°C to +50°C, Humidity 85% or less | Prerecorded | 105dB | 8ch bit input, 32ch binary input | 2.8Kg |
| **LKEH-FEW-EX** | | | Type-E | | Prerecorded | | 8ch bit input, 32ch binary input | 3.2Kg |
| **LKEH-FVF-EX** | | | MPEG1-Audio layer III, 64kbit/s | | 63 sec. | | 5ch bit input, 31ch binary input | 2.8Kg |
| **LKEH-FVW-EX** | | | MPEG1-Audio layer III, 64kbit/s | | 63 sec. | | 5ch bit input, 31ch binary input | 3.2Kg |

The mass indicated is based on a 3 tiered LED Model LKEH. The mass will change in conjunction with the number of tiers. Add or remove 0.2 Kg per module.

# EHS-EX, EHV-EX

Explosion Proof

CE Ex II 3GD Ex nA IIC T4 Gc, Ex tc IIIC T85°C Dc IP65 94/9/EC(ATEX)CENELEC:EN 60079-0, EN 60079-15, EN 60079-31

## 105dB MP3 Annunciator / Alarm Horns

The EH-EX Series features a large memory storage for

- Suitable for Zone 2 and Zone 22 applications
- CE compliance in accordance with ATEX
- Supports MP3 alerts up to 220 sec. (64kbit/s) with up to 63 selectable playback channels
- Comes pre-loaded with 32 (EHS) or 63 (EHV) tones and melodies
- Adjust playback volume from 0 to 105dB
- Field programmable with rear loading SD card port
- Designed for indoor and outdoor use, resistant to 4.5G vibrations
- Ideal for plant-wide notifications, public announcements, and process controls
- UL464, CSA-C22.2 NO.205-M1983, FCC Part 15 Subpart B Class 4
- Non-voltage (NPN) or PNP types available

EHS-EX
EHV-EX

## Dimensions (mm)

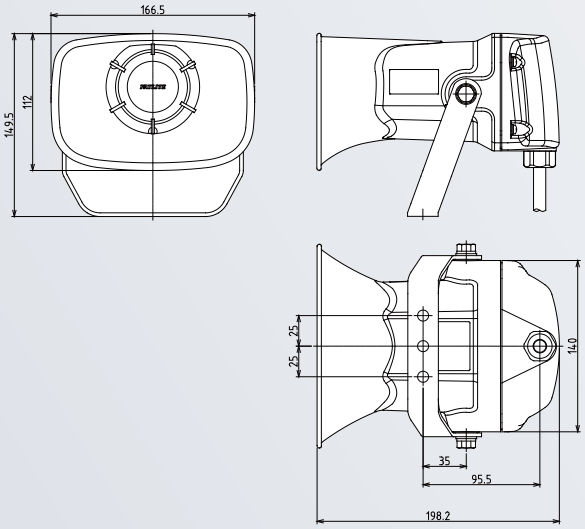


(Unit: mm)

## Wiring Diagram

Non-voltage (NPN) Wiring

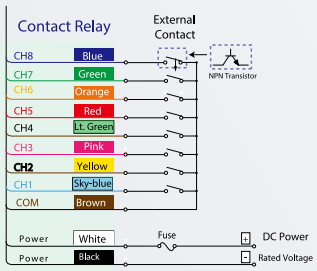


PNP Wiring

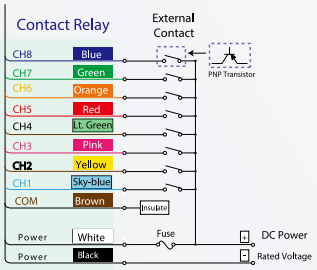


Terminal (NPN)

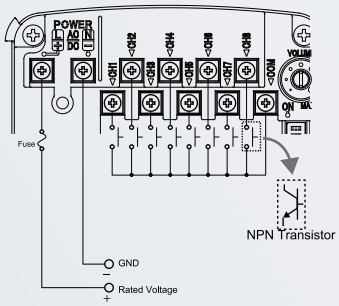


Terminal (PNP)

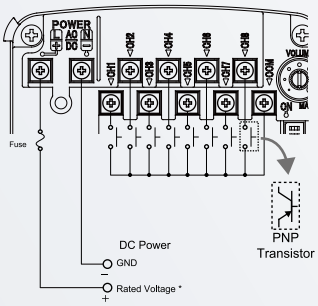


## Model Code

**EHV- □□ G-EX**

Model

| | |
|---|---|
| EHS | Alarm Horn |
| EHV | MP3 Annunciator |

Melody/Alarm Type

| | |
|---|---|
| G | Type G(EHV Only) |
| E | Type E(EHS Only) |

Rated Voltage

| | |
|---|---|
| M1 | 12-24V DC |

Wiring Type

| | |
|---|---|
| H | Cable |
| T | Terminal* |

## Specifications

| Model | Rated Voltage | Voltage Range | Power Consumption | Rated Current Consumption | Sound Pressure (max) | Operating Temperature Range | No. of Playback Messages | Protection Rating | Wiring Type | Mass |
|---|---|---|---|---|---|---|---|---|---|---|
| **EHS-M1HE-EX** | 12 - 24V DC | 10.8V to 26.4V DC | 4W (at 24V DC) | 450mA (max) | Alarm: 110dB (at 1m) | -20 °C to +50°C (Less than 85% RH) | Bit Input: 8 Binary Input: 32 | IP65 | Cable | 1.25kg |
| **EHS-M1TE-EX** | | | | | | | | | Terminal | |
| **EHV-M1HG-EX** | 12 - 24V DC | 10.8V to 26.4V DC | 4W (at 24V DC) | 400mA (max) | Alarm: 110dB (at 1m) MP3: 105dB (at 1m) | -20 °C to +50°C (Less than 85% RH) | Bit Input: 8 Binary Input: 63 | IP65 | Cable | 1.25kg |
| **EHV-M1TG-EX** | | | | | | | | | Terminal | |

Note 1: The sound pressure level is based on measurements under controlled conditions (voice-synthesized 1 kHz sine wave played back from a distance of 1 meter), therefore the surrounding environmental conditions and message content will result in different values for the sound pressure level.

Note 2: Even when starting two or more units simultaneously, a lag will occur during message playback.

MPEG Layer-3 audio coding technology licensed from Fraunhofer IIS and Thompson Licensing.(Model EHV)

# CLN-24-CD-PT-EX

Explosion Proof

CE Ex II 3GD Ex nA IIC T4 Gc, Ex tc IIIC T135°C Dc IP65 94/9/Ex(ATEX)CENELEC:EN 60079-0, EN 60079-15, EN 60079-31

## Water and Oil Resistant LED Spot Light

The CLN-EX Series LED Spot Lights features a compact, rugged design, high intensity LEDs, and protection ratings to withstand the harshest conditions. With a 22.2mm thickness, a 820 lux output, and a 180-degree adjustable angle bracket, the CLN-EX maximizes visibility in just about any environment.

- Suitable for Zone 2 and Zone 22 applications
- CE compliance in accordance with ATEX
- 60,000 hours or about 7 years of service life
- Protection ratings: IP66G, IP67G, IP69K
- IEC62471 Compliance (Photobiological Safety Standard)
- Daylight color temperature (8,500K) suitable for detailed work
- Included angle bracket with 180-degree range of motion
- 22.2mm Thickness x 85mm Width x 126mm Height

CLN-24-CD-PT-EX

## Light Distribution Characteristics

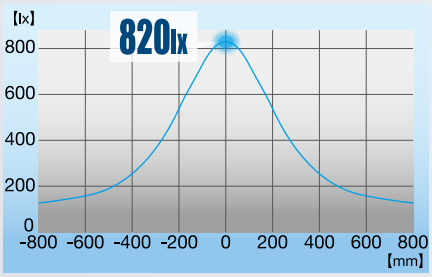


High intensity LEDs with 820 lx provides optimal illumination with only a 174mA current draw

Stainless steel, 180-degree angle bracket provides versatile installation options to illuminate your work area

### Floor Mount

### Wall Mount

### Ceiling Mount

Angle bracket can be removed for direct mounting

Color temperature of 6,500K is ideal for detailed work areas

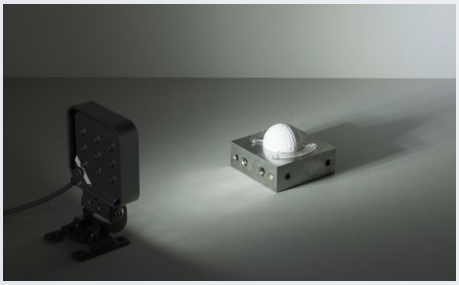

Natural, wide light distribution at 550 lumens; 40W bulb equivalent

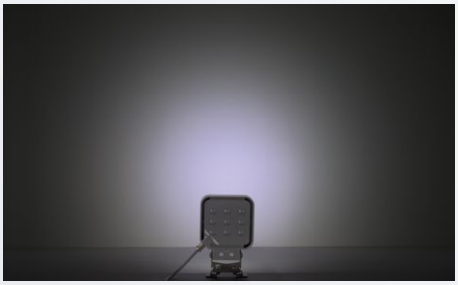

## Specifications

| Model | CLN-24-CD-PT-EX |
|---|---|
| Color Code (Color) | CD (Daylight) |
| Color Temperature (typ.) | 6500K |
| Illumination (typ.) (Centered at 24VDC) 1m | 820 lx |
| Total Luminous Flux (typ.) | 550 lm |
| Rated Voltage | 24V DC (Polarized) |
| Operating Voltage Range | 24V DC ±10% |
| Rated Current/Power Consumption | 174mA ±10% / 4.2W |
| Operating Ambient Temperature | -40°C to +60°C (90% RH, No Condensation) |
| Main Unit Material | Body: Aluminum Alloy, Lens: Tempered Glass |
| Protection Rating | IP66G/67G (JIS C 0920)/69K (DIN 40050 part 9) (excluding cable end) |
| Mounting Location/Direction | Indoor / Any Direction |
| Insulation Resistance | DC 500V 5MΩ or more |
| Withstand Voltage | 500VAC for 1 minute (Between terminals and chassis) |
| Vibration Resistance | 30Hz total amplitude 0.3mm P-P<br>Back and forth, up and down, right and left for 2 hours each<br>Total amplitude 0.3mm P-P (10-57Hz), Acceleration 19.6m/s² |
| Mass (Tolerance ±10%) | 430g |

*1 : The typical value of LED brightness is 70% of the original specification, but may vary depending on actual applications.
*2 : IP66G and IP67G are Japanese Industrial Standards (JIS C0920-2003), and IP69K is the German DIN 40050 PART9 Standard.
*3 : CLN-24-CD-PT-EX Spot Light can only be installed where risk of mechanical danger is limited to 2 Joules of impact energy

## Dimensions (mm)

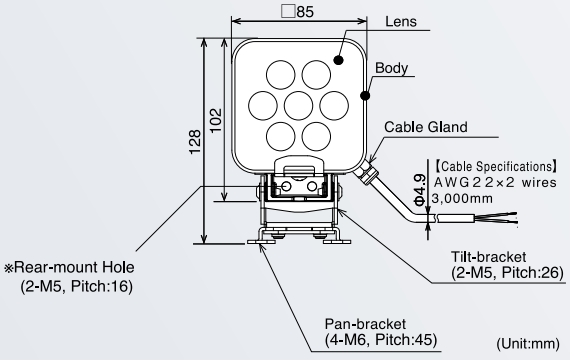

CE Ex II 3GD Ex nA IIC T4 Gc, Ex tc IIIC T135°C Dc IP65 94/9/Ex(ATEX)CENELEC:EN 60079-0, EN 60079-15, EN 60079-31

# Water and Oil Resistant LED Light Bar

The CLK-EX LED Light Bar Series features a rugged design, high intensity LEDs, and protection ratings to withstand the harshest conditions. The CLK Series is an ideal choice for major illumination projects.

CLK3S-24AG-CD-EX

CLK6C-24AG-CD-EX

- Suitable for Zone 2 and Zone 22 applications
- CE compliance in accordance with ATEX
- Tempered glass lens to withstand flying scrap metal
- Stainless steel and aluminum body options available
- Available in 250mm, 350mm, 650mm lengths
- 1200 lx (3S/3C); 2100 lx (6S/6C)
- Color Temperature: CD 6,500K, CN 5,000K
- Protection Ratings: IP66G, IP67G, IP69K

## Dimensions (mm)

**CLK-3C-24SG-□-EX**

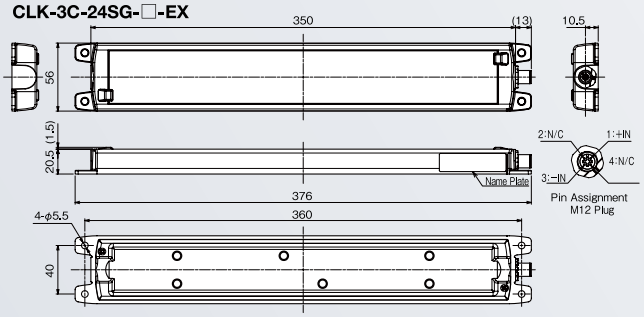


**CLK-□□-24AG-□-EX**

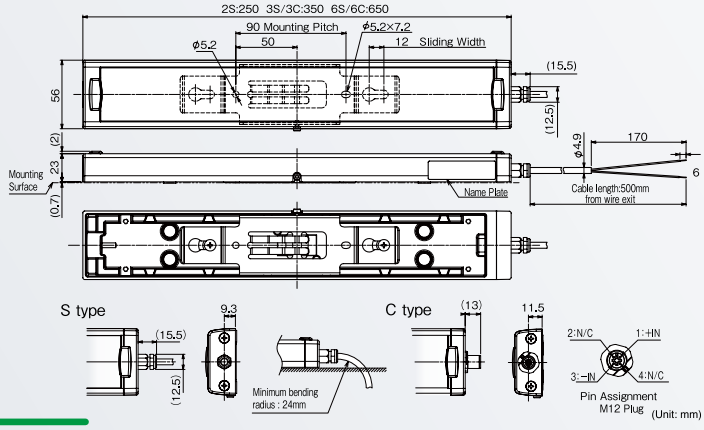


## Model Code

**CLK-□□-24□□-□-EX**

Model

Illumination Area Size

| | |
|---|---|
| 2 | 200mm |
| 3 | 300mm |
| 6 | 600mm |

Wiring Specifications

| | |
|---|---|
| S | Side-exiting Cable |
| C | M12 Conector |

Color

| | |
|---|---|
| CD | Daylight |

| | |
|---|---|
| AG | Aluminum & glass |
| SG | Stainless steel & glass |

## Specifications

| Model | CLK-□□-24□□-□-EX |
|---|---|
| LED Color | Day light(CD) / Natural White(CN) |
| Rated Voltage | 24V DC |
| Operating Voltage Range | Rated Voltage ± 10% |
| Current Consumption | 522mA ± 40mA (3S/3C type) |
| Light Source | High intensity LED × 18 elements (3S/3C type) |
| Luminous Intensity at Optical Center (lx at 1m) | 1200 lx (3S/3C); 2100 lx (6S/6C) |
| Main Body | Housing: Aluminum, Cover: Tempered glass |
| Operating Temperature Range | -40°C~+60°C (No condensation 90%RH or less) |
| Mounting Direction | Any Direction (for indoor use only) |
| Protection Rating | add IP69K |
| Vibration Resistance | 19.6m/s2 |
| Mass | 1490g (3C type) |

The CLK-EX Series may only be installed in places where risk of mechanical danger is limited to an impact energy of 2 Joules (1 Kg mass dropped at 20cm height).

CE Ex II 3GD Ex nA IIC T4 Gc, Ex tc IIIC T135°C Dc IP65 94/9/Ex(ATEX)CENELEC:EN 60079-0, EN 60079-15, EN 60079-31

# Water Resistant LED Light Bar

The CLA-EX LED Light Bar Series features a light weight design, high intensity LEDs, and a IP69K rating to withstand wet environments. The CLA Series is an ideal choice for high temperature, high pressure washdown applications

- Suitable for Zone 2 and Zone 22 applications
- CE compliance in accordance with ATEX
- Available in 100mm (140 lx), 200mm (270 lx), 300mm (400 lx), 600mm (650 lx), 900mm (810 lx) lengths
- Protection Ratings: IP66, IP67, IP69K
- Variety of polycarbonate mounting brackets available

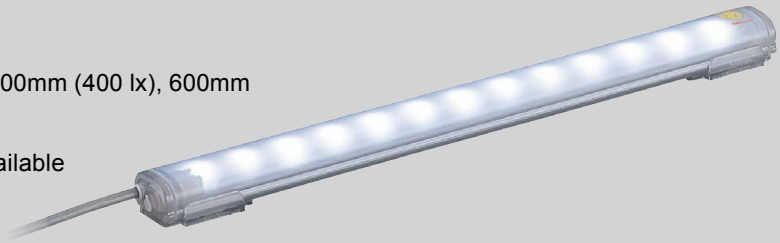

CLA3S-24-CD-30-EX

## Dimensions (mm)

CLA1S:124, CLA2S:224, CLA3S:324, CLA6S:624, CLA9S:924

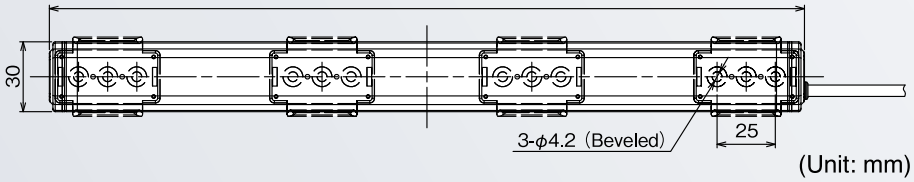


(Unit: mm)

## Model Code

CLA□S-24-□□-30-EX

LED color

| | |
|---|---|
| CD | Daylight 6800K |

Length

| | | | |
|---|---|---|---|
| 1 | 100mm | 6 | 600mm |
| 2 | 200mm | 9 | 900mm |
| 3 | 300mm | | |

## Optional Parts

**Rear Attachment (Magnetic Mount) Model SZ-310ARM**

**Side Attachment (Screw Mount) Model SZ-310AS**

**Side Attachment Model SZ-310ASB**

*Stainless steel brackets are also available.

## Specifications

| Models | Luminous Color | Length | Rated Voltage | Operating Voltage Range | Rated Current Consumption | Center Radiation (lx/50cm) | Mounting Direction | Vibration Resistance | Mass |
|---|---|---|---|---|---|---|---|---|---|
| **CLA1S-24-CD-30-EX** | Daylight | 100mm | 24V DC (Polarized) | 24V DC±10% | 104mA | 140 | Any Direction (Indoor Use) | 19.6m/s² | 80 g |
| **CLA2S-24-CD-30-EX** | Daylight | 200mm | | | 208mA | 270 | | | 130 g |
| **CLA3S-24-CD-30-EX** | Daylight | 300mm | | | 240mA | 400 | | | 180 g |
| **CLA6S-24-CD-30-EX** | Daylight | 600mm | | | 480mA | 650 | | | 340 g |
| **CLA9S-24-CD-30-EX** | Daylight | 900mm | | | 720mA | 810 | | | 500 g |

MEMO

# Network

| Page number | Page 33 | Page 35 | Page 37 | Page 41 | |
|---|---|---|---|---|---|
| Model Name | USB-controlled Signal Tower | Transmitter/Receiver for Wireless Data Acquisition System | | Network Monitoring Signal Tower with MP3 | |
| Model | **LR6-USB** | **WD-LR-Z2** | **WD-Z2** | **NH-FV2** | |
| | | | | **NHP** | **NHL** |
| Product Image | | | | | |
| Ethernet | | ○ (WDR-LE-Z2) | ○(WDR-LE-Z2) | ○ | ○ |
| USB control | ○ | | | | |
| RS-232C | | | | | |
| Size (mm) | ϕ60 | | | ϕ40 | ϕ60 |
| IP | 65 | | | 20 | 20 |
| Audible sound pressure in dB (at a distance of 1m) | 80 | | | 88 | 88 |
| Body | Polycarbonate | | | | |
| Globe | Polycarbonate | | | Polycarbonate | Polycarbonate |
| Light Source | LED | | | LED | LED |
| Digital output | | 1 (WDR-LE-Z2) | 1 (WDR-LE-Z2) | 1 | 1 |
| Digital input | | | | 4 | 4 |
| SNMP v1/v2/v3 | | | | v1/v2 * | v1/v2 * |
| RSH | | | | ○ | ○ |
| PING | | | | 24 | 24 |

* Transmission is with v2c only

| Page number | Page 45 | Page 48 | Page 49 |
|---|---|---|---|
| Model Name | Signal Tower | Interface Converter with Signal Tower | Interface Converter |
| Model | **LA6-POE** | **PHE-3FB3** | **NBM-D88NN** |
| Product Image | | | |
| Ethernet | ○ | | ○ |
| USB control | | ○ | |
| RS-232C | | ○ | |
| Size (mm) | ϕ60 | ϕ40 | |
| IP | 54 (20 for SN) | 20 | 20 |
| Audible sound pressure in dB (at a distance of 1m) | 85 | 80 | |
| Body | ABS | | |
| Globe | Polycarbonate | cap | |
| Light Source | LED | LED | |
| Digital output | | | 8 |
| Digital input | | | 8 |
| SNMP v1/v2/v3 | | | v1/v2 * |
| RSH | | | ○ |
| PING | | | 24 |

* Transmission is with v2c only

| Page number | Page 42 | | Page 51 |
|---|---|---|---|
| Model Name | Network Monitoring Signal Tower | | Interface Converter |
| Model | NH-FB2 | | PHC-D08N |
| | NHP | NHL | |
| Product Image | | | |
| Ethernet | O | O | |
| USB control | | | O |
| RS-232C | | | O |
| Size (mm) | ϕ40 | ϕ60 | |
| IP | 20 | 20 | 20 |
| Audible sound pressure in dB (at a distance of 1m) | 80 | 80 | |
| Body | | | |
| Globe | cap | cap | |
| Light Source | LED | LED | |
| Digital output | | | 8 |
| Digital input | | | |
| SNMP v1/v2/v3 | v1/v2 * | v1/v2 * | |
| RSH | O | O | |
| PING | 24 | 24 | |

* Transmission is with v2c only

* For specifications, see the product page.

USB-controlled Signal Tower

# LR6-USB

LR6-3USBW-RYG
LR6-3USBK-RYG
(pre-assembled product)

LR6-USBW
LR6-USBK
(body unit)

- PC or HMI controlled
- Custom programming made easy with our free software library (.DLL)
- Open architecture makes it possible to control the device with other operating systems such as Linux
- Supports HID class. No exclusive drivers necessary
- Supports solid color, clear-globe, and 7-in-1 multi-color LED units
- IP65 protection rating - High water and dust protection

USB | ϕ60 | Lighting 5Patterns | Buzzer 5Patterns | Buzzer 80dB | IP65 | CE | UL | cUL | Clear globe (Sold separately) | Multi color (Sold separately) | RoHS

## Specifications

| Model | LR6-3USBW-RYG LR6-3USBK-RYG (pre-assembled product) | LR6-USBW LR6-USBK (body unit) |
|---|---|---|
| Rated Voltage | 5V DC (USB bus power) | |
| Operating Voltage Range | Rated voltage ±5% (Compliant with USB2.0 standard) | |
| Rated Current Consumption | Maximum 500mA | |
| Ambient Operating Temperature | -20 ℃ to +50 ℃ | |
| Ambient Operating Humidity | 90% RH or less, no condensation | |
| Mounting Location / Direction | Indoors, Upright | |
| Protection Rating | IP65 (IEC 60529)/ NEMA TYPE 4X, 13* | |
| Mass (Tolerance: ±10%) | 320g | 140g |
| LED unit control | Lighting, light off, pattern on (4 types) | |
| Audible control | uzzer on, buzzer off, sound pattern 4 types / select from 13 pitches | |
| Audible sound pressure | Typ. 80dB (approximately 10dB with sound reduction) (at a distance of 1m in front of the buzzer aperture) Frequency 2349.3Hz | |
| Communication method | USB 2.0 Full Speed | |
| Software Library (DLL) supported operating systems | Windows® 7, Windows® 8 (except RT), Windows® 8.1 (except Windows® 8.1RT), Windows® 10 | |

* Except when using pole bracket or wall bracket.

## ■ Communication Specifications

※ For details, please see the Instruction Manual, which you can download from our website.

**Development language and supported software (DLL)**

| | |
|---|---|
| Development language | C, C++, C#, VB |
| Compatible software | Visual Studio 2008, 2012, 2013 |

**API list (Software library (DLL))**

| | | |
|---|---|---|
| Starting USB communication | Ending USB communication | Controlling LED unit with the selected color (lighting/off) |
| Controlling multiple LED units | Controlling the buzzer with selected buzzer pattern (play sound) | Controlling the buzzer with selected buzzer pattern and pitch |
| Turning off all LED units and stopping the buzzer | Getting the firmware version with communication in progress | Getting the DLL version |

**Communication Data Format (protocol specifications)**

| Byte 1 | Byte 2 | Byte 3 | Byte 4 |
|---|---|---|---|
| Command version | Command ID | Buzzer control | Buzzer pitch |
| "If you emit sound (continuous) with red lighting, buzzer pattern 1 (Sound A:D7, Sound B:off)" | | | |
| 0x00 | 0x00 | 0x02 | 0x60 |

| Byte 5 | Byte 6 | Byte 7 | Byte 8 |
|---|---|---|---|
| LED control | | | Empty |
| R / Y | G / B | C / Static | |
| "If you emit sound (continuous) with red lighting, buzzer pattern 1 (Sound A:D7, Sound B:off)" | | | |
| 0x10 | 0x00 | 0x00 | 0x00 |

## Dimensions (mm)

■ LR6-3USBW-RYG
LR6-3USBK-RYG

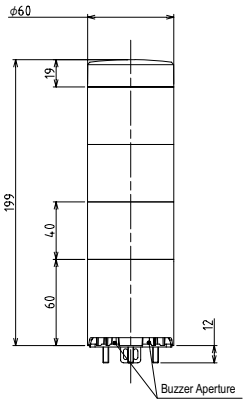


■ LR6-USBW
LR6-USBK

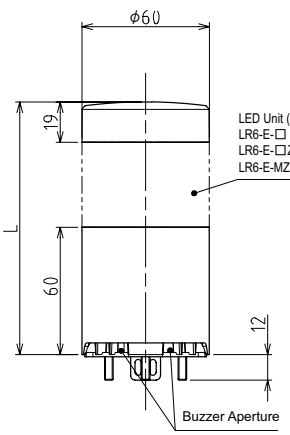


| Number of LED units | L (mm) |
|---|---|
| 0 | 79 |
| 1 | 119 |
| 2 | 159 |
| 3 | 199 |
| 4 | 239 |
| 5 | 279 |

■ Mounting Dimensions (mm)

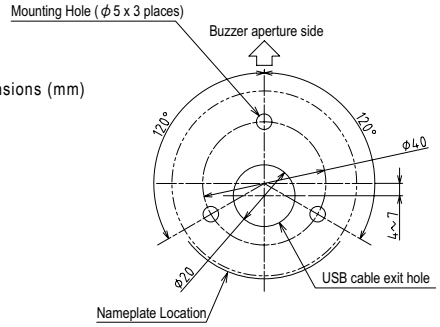


■ Compatible USB Cable dimensions

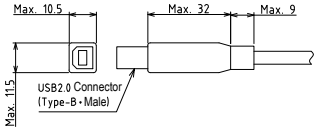


* This product does not include an USB cable. Please provide your own.

## Model Code

**LR6-□USBW-RYG**

Number of tiers

| | |
|---|---|
| Blank | Body Unit only |
| 3 | 3 tiers |

Body Color

| | |
|---|---|
| W | Off-white |
| K | Black |

LED Unit Colors

| | |
|---|---|
| Blank | Body Unit only |
| RYG | From top; red, yellow, and green |

## Optional Parts

For details, see pages 182 to 187.

| Optional Parts | Model |
|---|---|
| Pole Bracket | SZP-004W/SZP-004K |
| Wallmount Bracket | SZK-003W/SZK-003K |
| Circular Mounting Bracket | SZ-016A |
| Circular Mounting Bracketl | SZ-010 |
| Pole (100mm) | POLE-100A21(K) |
| Pole (300mm) | POLE-300A21(K) |
| Pole (800mm) | POLE-800A21(K) |

## Ideal for Factory Automation, Unique Solutions for USB Connections

### Production line

With this easy-to-use and understand signal tower, you can alert and notify users about what is happening on the production lines.
The signal tower connects to a production line PC with a single USB cable. Working with a program to notify of situations such as where an error has occurred, or when a button on the touch panel is pressed, you can control flashing LED units or sound the buzzer.
With DLL support (for Windows®), you can easily build programs.
Control is possible with other operating systems as well.
Use for a variety of purposes, such as notifying a manager.

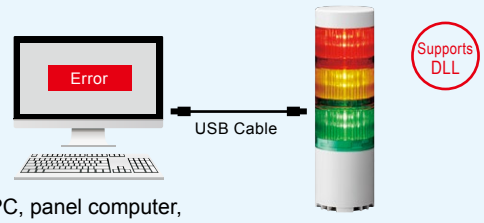


PC, panel computer, and so on.

LR6-USB

### Production office

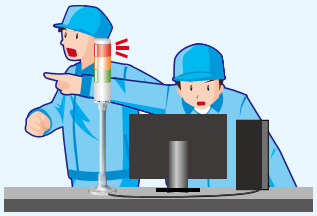

Visualize the production site status.

### Installed on equipment

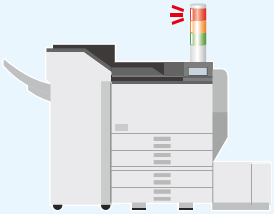

Works with PC controlled equipment, such as a printer.
Alerts for out-of-paper or other errors.

### Supports both, DLL control and protocol control

By using DLLs, you can build your programs more easily. Possible for control on other operating systems based on the protocol specifications.
As it is a HID class device, it does not require a proprietary driver.

◆ LED Unit
Lighting, light off, pattern on (4 types)
◆ Buzzer
Buzzer on, buzzer off, and 4 types of sound pattern
Select 2 from 13 pitches

### Demo Software

Confirm actual operation of the LED unit and buzzer. For details, please see our website.

### Compatible LED Units

LR6-E -R/Y/G/B/C

LR6-E -RZ/YZ/GZ/BZ

LR6-E-MZ

- Maximum 5 LED units (LR6-E-□,LR6-E-□Z) can be installed in total.
- Cannot be used with non-compatible LED units
- Multiple LED units of the same color (LR6-E-□,LR6-E-□Z) cannot be used.
- When LR6-E-MZ is connected, cannot connect other units.
- When LR6-E-MZ is connected, there are 2 types of patterns.

### Supports wall mount and pole mount

We also have wallmount brackets and optional mounting poles.

Example

# WD-LR-Z2

RoHS CE FCC UL cUL

LR LED Signal Tower Series compatible Transmitters (WDT) and Receiver (WDR).

The Wireless Data Acquisition System is a cost-effective, IIoT-enabled add-on for the LR Series. This system allows signal towers to wirelessly transmit equipment status changes to a host PC for real-time monitoring and data analysis. Identify production bottlenecks, enhance supervisory control, optimize productivity, and improve Overall Equipment Effectiveness (OEE) with this complete, networked solution.

### Transmitter Installation

Simply twist to unlock and remove segments. The WD transmitter is then twisted on above the Signal Tower base unit. No tools necessary for installation.

## Transmitter

Transmitter for LR6 Signal Tower

### WDT-6LR-Z2

LR6 Series | Current Consumption typ.20mA | Estimated reach of radio waves *2 20m

Transmitter for LR5 Signal Tower

### WDT-5LR-Z2

LR5 Series | Current Consumption typ.20mA | Estimated reach of radio waves *2 20m

## Receiver

Stationary Receiver

### WDR-LE-Z2

Connection method LAN/USB | Current Consumption typ.65mA | Can operate multiple units *3 | Recommended number of connected transmitters 20 *1 Maximum 30

*1 Because of the characteristics of radio waves, the actual number may vary depending on the installation location, communication environment, and communication frequency.
*2 Because of the characteristics of radio waves, this number is for reference only.
*3 Using LAN wiring, you can operate multiple transmitters / receivers simultaneously. (Please contact us for details.)

## Optional

Setup Kit
(for WDT-6LR-Z2)
Model: WDX-6LRB

Setup Kit
(for WDT-5LR-Z2)
Model: WDX-5LRB

Hardware System Setting Software
Model: WDS-WIN01

Global AC adaptor (for WDR-LE-Z2)
Model: ADP-001
Supported countries: Japan, EU, USA, China, South Korea, Taiwan, Thailand, Indonesia, Canada, Philippines, and Vietnam

## Specifications

| Model | WDT-5LR-Z2 | WDT-6LR-Z2 |
|---|---|---|
| Connectible types | LR5 Signal Tower<br>Mount on top of the body unit | LR6 Signal Tower<br>Mount on top of the body unit |
| Rated Voltage | 24V DC | |
| Operating Voltage Range | 19.0 - 26.4V DC | |
| Rated Current Consumption | Maximum 55 mA | |
| Ambient Operating Temperature | -10 ℃ to +50 ℃ | |
| Ambient Operating Humidity | 85% RH or less, no condensation | |
| Storage Ambient Temperature | -20 ℃ to +60 ℃ | |
| Storage Ambient Humidity | 85% RH or less, no condensation | |
| Mounting location | Indoors | |
| Mounting direction | Upright | |
| Protection Rating (based on LR model) | IP65 (IEC 60529)/ NEMA TYPE 4X, 13 | |
| Mass (Tolerance: ±10%) | 74 g | 85g |
| Supported countries and regions | Japan, USA, EU, China, Indonesia, Taiwan, South Korea, Thailand, Malaysia,<br>Singapore, Philippines, Vietnam, Canada, Mexico, and Brazil | |
| Communication Standard | IEEE 802.15.4 (wireless communication) | |
| Communication Frequency | 2405MHz - 2480Mhz (16 channels) | |
| Input Signal | Control signal input | |
| Number of inputs | 6 points (red, amber, green, blue, white, buzzer) | |
| Input Reaction Time | 100 ms or longer | |
| Display Unit | Indicator for status display | |
| Operation Unit | DIP Switch for setting | |

## Wiring Diagram

■ Power supply Voltage: 12V DC / 24V DC

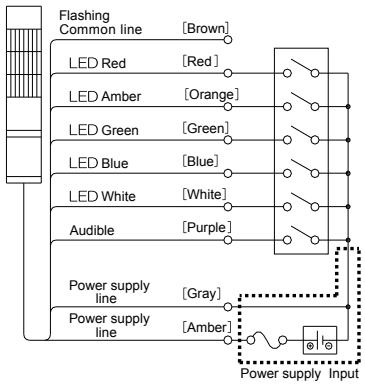


■ Power supply Voltage: 100V AC - 240V AC

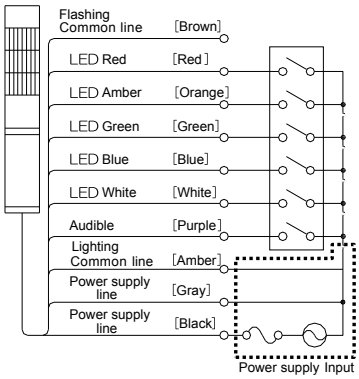


## Dimensions (mm)

Model WDT-5LR-Z2

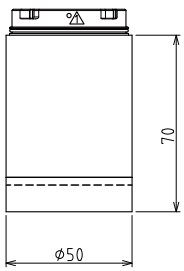


Model WDT-6LR-Z2

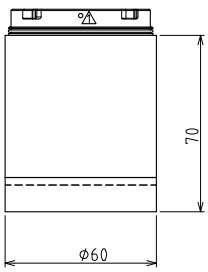


Model WDR-LE-Z2

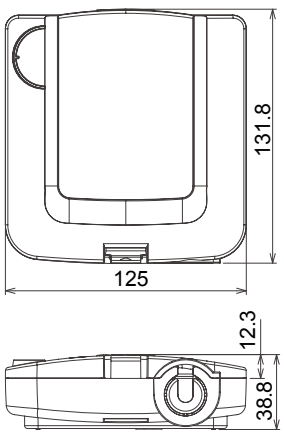

# WD-Z2



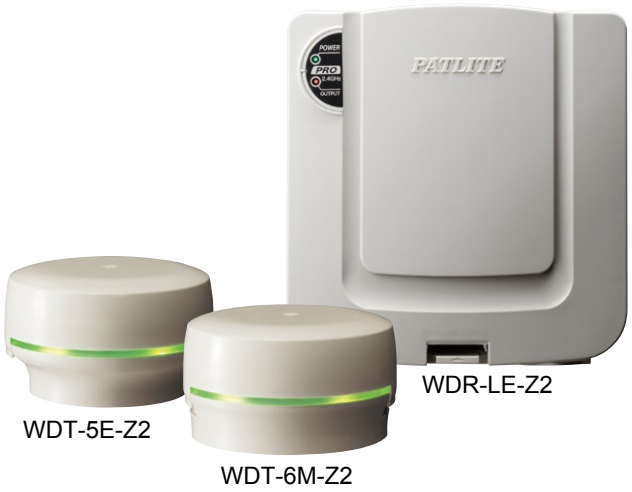


RoHS CE FCC UL
Transmitter only

LME and LE LED Signal Tower Series compatible Transmitters (WDT) and Receiver (WDR).

The Wireless Data Acquisition System is a cost-effective, IIoT-enabled, retro-fit solution for the LME and LE Series. This system allows signal towers to wirelessly transmit equipment status changes to a host PC for real-time monitoring and data analysis. Identify production bottlenecks, enhance supervisory control, optimize productivity, and improve Overall Equipment Effectiveness (OEE) with this complete, networked solution.

## Transmitter

Transmitter for LME Signal Tower

### WDT-6M-Z2

Compatible Signal Tower Types *1: LME Series
Current Consumption: typ.20mA
Estimated reach of radio waves: 20m *3

Transmitter for LE Signal Tower

### WDT-5E-Z2

Compatible Signal Tower Types *1: LE Series
Current Consumption: typ.20mA
Estimated reach of radio waves: 20m *3

## Receiver

Stationary Receiver

### WDR-LE-Z2

Current Consumption: LAN/USB
Current Consumption: typ.65mA
Can operate *4 multiple units
Recommended number of connected transmitters: 20 *2 Maximum 30

*1 There are some restrictions on signal tower compatibility. Please contact us for details.
*2 Because of the characteristics of radio waves, the actual number may vary depending on the installation location, communication environment, and communication frequency.
*3 Because of the characteristics of radio waves, this number is for reference only.
*4 Using LAN wiring, you can operate multiple transmitters / receivers simultaneously. (Please contact us for details.)

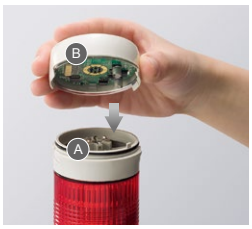


### About Transmitter Installation

Installation is simple: Attach the transmitter bracket (A) to the Signal Tower, affix the bracket with the center screw of the Signal Tower, then fit the top cover. (B)
(Some wiring may be required.)

Global AC adaptor (for WDR-LE-Z2)
Model: ADP-001
Supported countries: Japan, EU, USA, China, South Korea, Taiwan, Thailand, Indonesia, Canada, Philippines, and Vietnam

# Specifications

## Transmitter: General Specifications

| Item | Specifications | |
|---|---|---|
| Model Name | **WDT-6M-Z2** | **WDT-5E-Z2** |
| Signal Tower Conformity | LME Series | LE Series |
| Rated Voltage | 24V DC (no polarity) | |
| Operating Voltage Range | 21.6V DC to 26.4V DC | |
| Current Consumption | 20mA ±10mA | |
| Ambient Operating Temperature | -10 to 60℃ | |
| Relative Humidity | 85% RH or less (no condensation) | |
| Storage Ambient Temperature | -20 to 70℃ (free from freezing) | |
| Mounting direction (indoors only) | Upright only (indoors only) | |
| Protection Structure | Conforms to the mounted Signal Tower | |
| Mass | 52g±5g | |
| Usable regions | Japan, The United States of America, Europe, China, Indonesia, Taiwan, Thailand, Philippines, Vietnam, Mexico | |

## Receiver: General Specifications

| Item | Specifications |
|---|---|
| Model Name | **WDR-LE-Z2** |
| Rated Voltage | 24V DC |
| Operating Voltage Range | 21.6V DC to 26.4V DC |
| Current Consumption | 65mA ±15mA |
| Ambient Operating Temperature | -10 to 60℃<br>0 to 40℃ (When using AC adaptor) |
| Relative Humidity | 85% RH or less (no condensation) |
| Storage Ambient Temperature | -20 to 70℃<br>-10 to 70℃ (When using AC adaptor)<br>(free from freezing) |
| Mounting direction (indoors only) | Upright (wall mount) Horizontal (horizontal installation) |
| Protection Structure | IP20 |
| Mass | 170g±10g |
| Usable regions | USA, Europe, China, Indonesia, Taiwan, Thailand, Philippines, Vietnam, Mexico, Korea, Brazil, Canada, Malaysia, Singapore |

WDR-LE-Z2 does not come with an AC adaptor.

## Wireless specifications

| Item | Specifications |
|---|---|
| Wireless Communication Standard | IEEE 802.15.4 |
| Wireless Communication Frequency | 2405MHz to 2480 MHz (16 channels) |
| Wireless Transmitting / Receiving Method | Direct Sequence (DS-SS*1) method |
| Wireless Communication method | ZigbeePRO Stack, ZigBee2007 compliant (with proprietary profile implemented) |
| Wireless Communication Speed | Theoretical maximum value 250 kbps *2 |
| Wireless Transmission Output | Maximum 3m or less (at the antenna power point) |
| Reach of radio waves*3 | Approximately 20m from source (reference value) |
| Number of relays | Maximum 30 |

## Function

| Item | | Specifications |
|---|---|---|
| Model Name | | **WDR-LE-Z2** |
| Communication Specifications | Ethernet | 10BASE-T/100BASE-TX (Full/Half) |
| | USB | USB1.1/USB2.0 (full speed supported)<br>* Connection with USB hub is not supported |
| Output Specifications | | Non-Voltage Contact: 1 point (24V DC 500mA) |

*1: DS-SS = Direct Sequence-Spread Spectrum

*2: Because of the characteristics of radio waves, the actual number may vary depending on the installation location and communication environment.

*3: Because of the characteristics of radio waves, the actual number may vary depending on the installation location, communication environment, and communication frequency.

# Wiring Diagram

● 24V AC/DC model

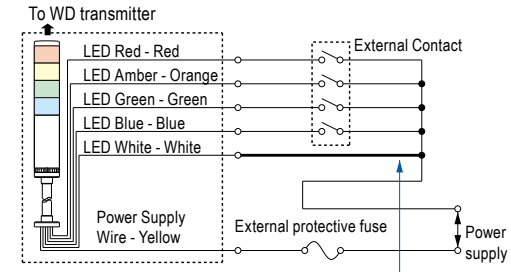


Apply voltage to the signal wire designated for the power supply wire (white in the diagram) and the power supply wire (yellow).

● 100/120/220/200/230-240V AC Model Specifications

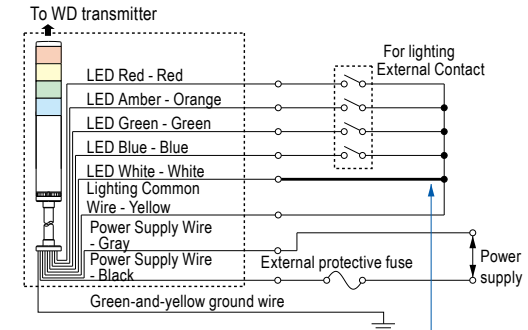


Connect the signal wire designated as the power supply wire (white in the diagram) and the lighting common wire (yellow).

To operate the transmitter, power must always be supplied.
As shown in the diagram to the left, apply voltage all the time to one of the signal wires.
(In the example, power is supplied using the white signal wire.)

# Dimensions (mm)

Model WDT-6M-Z2

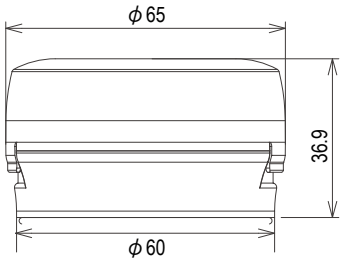


Model WDT-5E-Z2

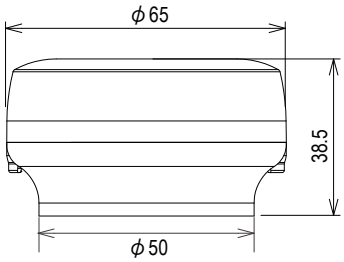


Model WDR-LE-Z2

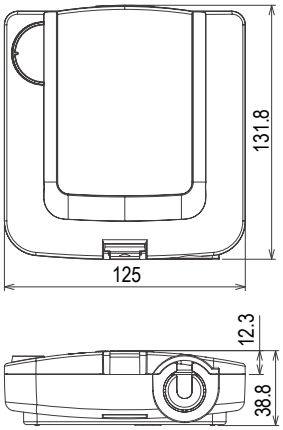

# How to use the WD Application Software

## ① When using software packages from PATLITE partners that support the WD system

You have the benefit of being able to start operations right away following installation of the WD system.

## ② When developing your own analysis and data acquisition applications

(1) Use generated CSV log data with Hardware System Setting Software.

(2) Without using Hardware System Setting Software, work directly with the data packets received by the transmitter on the PC or PLC.

* For details about socket communication and communication with PLCs, contact your local sales representative.

# Hardware System Setting Software

Model:WDS-WIN01

Improved ease of use
by combining 3 applications

- Data collection
- File settings
- System settings

& Also!!

- Splitting files
- Easy-to use interface
- Language settings function
- Supports WD-LR-Z2 extended format

(Recommended Operation Environment)

Windows7 (32/64bit), 8.1 (32/64bit), 10 (32/64bit),
Windows server 2012R2 (64bit), 2016 (64bit)

* Other than data collection, complimentary use of the other functions.

## You can split the file according to your needs

| | | | |
|---|---|---|---|
| Want to collect operation data for each machine | | Generate CSV file for each transmitter | |
| Want to collect data for each line or building | | Generate CSV file for each receiver | |
| Want to collect data for each work shift | | Generate CSV file for each work shift by specifying time periods (maximum 3 shifts) | |
| Want to avoid increasing time for data analysis because of increased data | | Split CSV file by file size (between 100 and 1000 KB) | |

## Contents of CSV file generated by Hardware System Setting Software

**Updated in real time**

As the equipment operation status changes, data is updated in real time. By setting up user name, you add equipment name for each transmitter.

**Create a file per day**

Use "Patlog_autoyyyy_mm_dd.csv" as the file name to automatically generate one file each day. (Initial settings)

**Record data every second**

Date/Time is determined by the PC clock data, and recorded down to the second.

| Date/Time | MAC address | User name | Red information | Amber information | Green information | Blue information | White information | Buzzer information | WDT monitoring information |
|---|---|---|---|---|---|---|---|---|---|
| 10/18/2017 8:10:15 | 58C232FFFE57811C | Device1 | 0 | 0 | 1 | 0 | 0 | 0 | 9 |
| 10/18/2017 9:15:35 | 58C232FFFE57811C | Device1 | 0 | 0 | 0 | 2 | 0 | 0 | 9 |
| 10/18/2017 9:30:45 | 58C232FFFE57811C | Device1 | 0 | 0 | 1 | 0 | 0 | 0 | 9 |
| 10/18/2017 9:55:50 | 58C232FFFE57811C | Device1 | 1 | 0 | 0 | 0 | 0 | 1 | 9 |
| 10/18/2017 10:5:30 | 58C232FFFE57811D | Device2 | 0 | 0 | 1 | 0 | 0 | 0 | 9 |

Standard Format

Extended Format

With the WDS-WIN01 extended function, you can automatically collect information like this.

| | |
|---|---|
| Red, yellow, green, blue, and white signal light information | 0: Light off, 1: Lighting, 2: Flashing, |
| Audible information* | 0: OFF, 1: ON |
| WDT monitoring information | 0: WDT is disconnected (equipment power off),<br>9: WDT is connected (equipment power on) |

* The status is also 1.ON, when Audible and flashing COM are synchronized.

## User Interface

**Data collection screen***

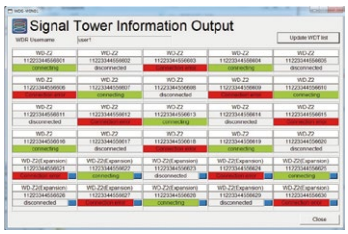


Equipment operation status is saved to the CSV file in real time.

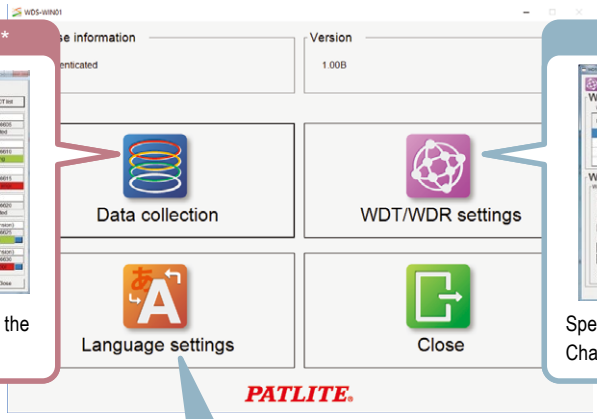


**Setting Screen**

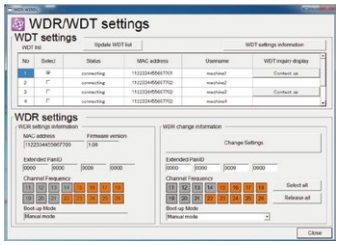


Specify various settings such as wireless Channel and group ID for transmitter/receiver

**Language settings**

Change the display language between English and Japanese

* To use data collection, purchasing a "WDS-WIN01" license key is required.

Network Monitor Signal Tower with MP3

# NHP-FV2/NHL-FV2

Signal Tower
ϕ40mm

Signal Tower
ϕ60mm

- Audible alarm and MP3 voice alert functions
- Built-in digital output and contact inputs
- Able to send email alerts
- Monitor network device status using SMNP protocol

## Specifications

| | | Product Model | NHP-3FV2-RYG NHL-3FV2-RYG |
|---|---|---|---|
| Network | | Physical Layer | Ethernet (IEEE 802.3 compliant) 10BASE-T / 100BASE-TX (auto-negotiation, full duplex/half duplex) |
| | | Data Link Layer | CSMA / CD |
| | | Network Layer | IP, ICMP, ARP |
| | | Transport Layer | TCP/UDP |
| | | Application Layer | HTTP, SMTP, SNMP, RSH, NTP, POP, DNS, SOCKET, DHCP, SLMP |
| General | | Clear Switch | Yes (Lights off and Stop Audio) |
| | | Self Diagnosis Function | Yes |
| | | Number of tiers | 1 - 5 tiers (can change after purchase) |
| | | Color Order | Standard colors (can change after purchase) |
| | | Setting function | Web Setup |
| Signal light | | Luminous Color | Red, Amber, Green, Blue, White (LED) Clear Globe |
| | | Flashing Rate (Frequency) | 60/minute |
| | | Sound Pressure Level (at 1m/variable) | Maximum 88dB or more - 0 |
| | | Sound Type | Sound / Buzzer / Message |
| | | Audio Line Output | Yes |
| | | Number of Playback Sounds | Max 70 types |
| | | Buzzer Sound | 4 types (short intermittent beeps) (slow intermittent beeps) (2 short intermittent beeps) (*continuous beep) |
| | | Sound Playback Mode | Playback from Latest Input / Memory Playback |
| | | Volume Control | Stepless Analog Volume Control / Input from Web Screen |
| | | BUSY Output | Yes |
| Main unit | | Power Consumption | Main Unit 2.2W<br>3.5W |
| | | Rated Voltage | Main Unit: 24V DC / AC Adaptor: 100 - 240V AC |
| | | Operation Temperature Range | 0 - 40℃ |
| | | Operation Humidity Range | 20 - 80% RH (no condensation) |
| | | External Contact Output | 1 point |
| | | External Contact Input | 4 points |
| | | USB port | TYPE-A 1 point |
| | | Operation Unit | Clear Switch, Reset Switch, Test Switch, Mode Switch, Volume |
| Conformity standards | | | RoHS Directive EN50581<br>EMC Directive EN55032 (Class A), EN55024<br>FCC Part 15 Subpart B Class A, ICES-003 Class A<br>UL1638, UL464, CSA C22.2 No.205<br>KC Certification KN61000-6-4, KN61000-6-2*<br>PSE specified electrical equipment<br>(enclosed AC adaptor only. The main unit is not PSE-specified)<br>* N Model only |

## Model Code

**NHL-3FV2N-RYG**

① ② ③ ④

① Size
P =ϕ40
L =ϕ60

② Tiers
1 =1tier
2 =2tiers
3 =3tiers
4 =4tiers
5 =5tiers

③ AC Adaptor
Blank =AC Adaptor included (UL)
W *1 =AC Adaptor included
Replacement plug incluedeed
(UL CCC VDE KC UK)
N *1 =AC Adaptor not included

④ LED Unit Colors
1 =1tier:R / Y / G
2 =2tiers:RY / RG
3 =3tiers:RYG
4 =4tiers:RYGB
5 =5tiers:RYGBC

*1 Three tiers only.

## Operation part / Connection part

■ Front Operation Interface

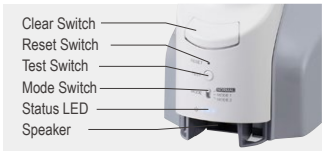


■ Back Connection Interface

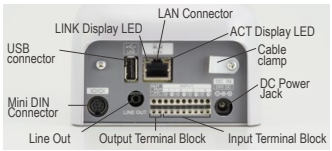


## Optional Parts

Wallmount Bracket
NH-WST2

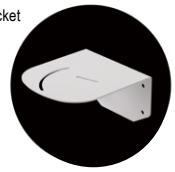

Dimmer Film
NHL-TF (for NHL-FV2/FB2)
NHP-TF (for NHP-FV2/FB2/PHE-3FB3)

## Supported LED Unit

LR4/6-E-R/Y/G/B/C

LR4/6-E-RZ/YZ/GZ/BZ

- The maximum number of LED unit attachments for LR4/6-E-☐ and LR4/6-E-☐Z, is five in total.

## Dimensions (mm)

NHP-☐FV2Main Unit Length and Mass by number of tiers

| Number of tiers | 1 tier | 2 tiers | 3 tiers | 4 tiers | 5 tiers |
|---|---|---|---|---|---|
| Main Unit Length (mm) | 256 | 296 | 336 | 376 | 416 |
| Mass (g) | 945 | 980 | 1015 | 1050 | 1085 |

NHL-☐FV2 Main Unit Length and Mass by number of tiers

| Number of tiers | 1 tier | 2 tiers | 3 tiers | 4 tiers | 5 tiers |
|---|---|---|---|---|---|
| Main Unit Length (mm) | 256 | 296 | 336 | 376 | 416 |
| Mass (g) | 1030 | 1090 | 1150 | 1210 | 1270 |

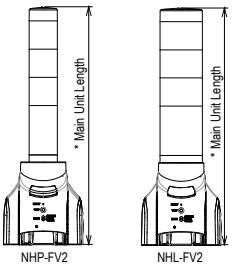


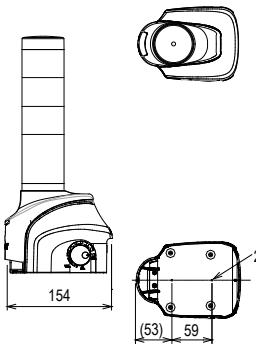


AC Aduptor

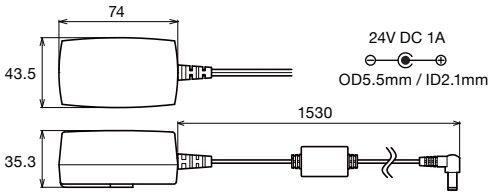


NH-WST2

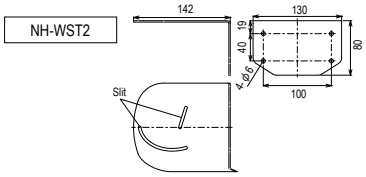

# NHP-FB2/NHL-FB2



Signal Towert
$\phi$40mm

Signal Tower
$\phi$60mm

- Designed to compliment office spaces
- Up to 5 LED units with 2 types of flashing patterns
- 4 audible alarm sound types

## Specifications

| | Product Model | NHP-3FB2-RYG NHL-3FB2-RYG |
|---|---|---|
| Network | Physical Layer | Ethernet (IEEE 802.3 compliant) 10BASE-T / 100BASE-TX (auto-negotiation, full duplex/half duplex) |
| | Data Link Layer | CSMA / CD |
| | Network Layer | IP, ICMP, ARP |
| | Transport Layer | TCP / UDP |
| | Application Layer | HTTP, SMTP, SNMP, RSH, NTP, POP, DNS, SOCKET, DHCP, SLMP |
| General | Clear Switch | Yes (Lights off and Stop Buzzer) |
| | Self Diagnosis Function | Yes |
| | Number of tiers | 1 - 5 tiers (can change after purchase) |
| | Color Order | Standard colors (can change after purchase) |
| | Setting function | Web Setup |
| Signal Light | Luminous Color | Red, Amber, Green, Blue, White (LED) Clear Globe |
| | Flashing Rate (Frequency) | 60/minute |
| | Sound Pressure Level (at 1m/variable) | Maximum 80dB or more, Minimum 70dB or less |
| | Sound Type | Buzzer |
| | Number of Playback Sounds | 4 types |
| | Buzzer Sound | 4 types (short intermittent beeps) (slow intermittent beeps) (2 short intermittent beeps) (*continuous beep) |
| | Volume Control | Change between Large, Small, and Off with a slide switch |
| Main Unit | Power Consumption | Main Unit 2.0W<br>4.0W |
| | Rated Voltage | Main Unit: 24V DC / AC Adaptor: 100 - 240V AC |
| | Operation Temperature Range | 0 - 40℃ |
| | Operation Humidity Range | 20 - 80% RH (no condensation) |
| | Operation Unit | Clear Switch, Reset Switch, Test Switch, Mode Switch, Volume Switch |
| Conformity standards | | RoHS Directive EN50581<br>EMC Directive EN55032, EN55024<br>FCC Part 15 Subpart B Class B, ICES-003 Class B<br>UL1638, UL464, CSA C22.2 No.205<br>KC Certification KN61000-6-2, KN61000-6-4*<br>PSE specified electrical equipment (enclosed AC adaptor only. The main unit is not PSE-specified)<br>* N Model only |

## Model Code

**NHL-3FB2N-RYG**

① Size
P = $\phi$40
L = $\phi$60

② Tiers
1 =1 tier
2 =2 tiers
3 =3 tiers
4 =4 tiers
5 =5 tiers

③ AC Adaptor
Blank =AC Adaptor included (UL)
W *1 =AC Adaptor included Replacement plug included (UL, CCC, VDE, KC, UK)
N *1 =AC Adaptor not included

④ LED Unit Colors
1 =1 tier: R / Y / G
2 =2 tiers: RY / RG
3 =3 tiers: RYG
4 =4 tiers: RYGB
5 =5 tiers: RYGBC

*1 Three tiers only.

## Installation Image

Support stay
(standard accessory)

## Optional Parts

Wallmount Bracket
NH-WST

Partition Mounting Bracket
NH-PST

Dimmer Film
NHL-TF (for NHL-FV2/FB2)
NHP-TF (for NHP-FV2/FB2/PHE-3FB3)

## Supported LED Unit

LR4/6-E-R/Y/G/B/C

LR4/6-E-RZ/YZ/GZ/BZ

- The maximum number of LED unit attachments for LR4/6-E-□ and LR4/6-E-□Z, is five in total.

## Dimensions (mm)

NHP-□FB2 Main Unit Length and Mass by number of tiers

| Number of tiers | 1 tier | 2 tiers | 3 tiers | 4 tiers | 5 tiers |
|---|---|---|---|---|---|
| Main Unit Length (mm) | 244 | 284 | 324 | 364 | 404 |
| Mass (g) | 575 | 610 | 645 | 680 | 715 |

NHL-□FB2 Main Unit Length and Mass by number of tiers

| Number of tiers | 1 tier | 2 tiers | 3 tiers | 4 tiers | 5 tiers |
|---|---|---|---|---|---|
| Main Unit Length (mm) | 244 | 284 | 324 | 364 | 404 |
| Mass (g) | 660 | 720 | 780 | 840 | 900 |

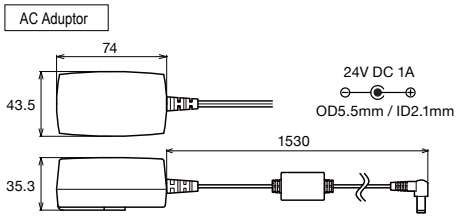


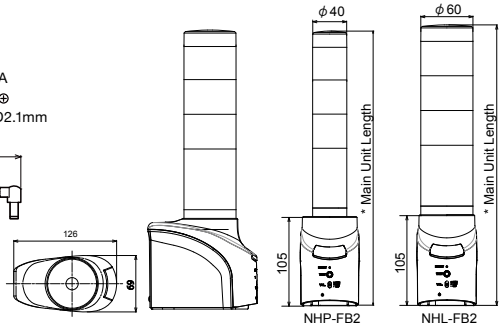


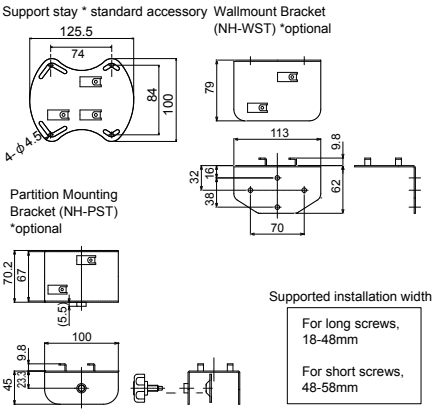

# Function Features

## Various monitoring functions supported

### PING Device Monitor

**Monitors Device Existence on the Network**

Each NH Tower initiates PING interaction for up to 24 network devices. When a PING response fails, light/sound signaling occurs to warn administrators.

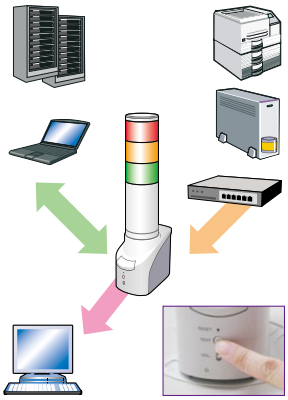

### SNMP v1・v2c

**Monitor networking equipment at a low cost**

Many network devices (UPS, printers, routers, switches, etc.) generate SNMP TRAP messages when a failure occurs. The NH tower can trigger light/sound signaling based on these messages to warn the administrator.

It can distinguish the various TRAPS. Register up to 16 groups (4 nodes per group).

### Application Monitoring

The tower can monitor important background applications and signal the administrator upon any failure.

### Self Diagnosis Function

The test switch on the front of the Body can check the Signal Tower and buzzer operation functions easily without it being controlled through the network.

## Various Communication Commands

### Control with HTTP Commands

You can send HTTP communication commands to control all notification patterns.

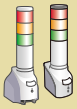

NH-FB Series / NH-FV Series

Execute command (Red, Amber, Green, Lighting, Sound Buzzer)
http://192.168.10.1/api/control?alert=111001

Execute command (execute clear operation)
http://192.168.10.1/api/control?clear=1

NH-FV Series

Execute command (Red - Lighting, Amber - Flashing 1, Playback message on ch 10 once)
http://192.168.10.1/api/control?led=12000&sound=10

Execute command (digital output ON)
http://192.168.10.1/api/control?output=1

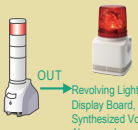


### RSH

**RSH Control**

It is easily controllable by RSH commands, which is a flexible protocol. Network integrated management software and event information, including various monitor tools etc., are turned into a trigger to cause lighting, flashing, and the buzzer to sound in synchronicity with the light of the Signal Tower.

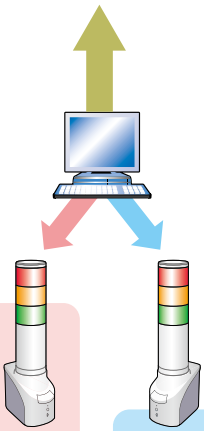

NH-FB Series / NH-FV Series

Event Occurrence: Execute command (Red, Amber, Green, Lighting, Sound Buzzer)
For RSH:
rsh 192.168.10.1 -l root alert 111001

NH-FV Series

Event Occurrence: Execute command (Playback message on ch 10)
For RSH:
rsh 192.168.10.1 -l patlite sound 10

### SOCKET Communication

**PHN Command Compatibilityrted**

It is controllable with 2 byte commands.

* Compatible with NHE-3FB, NHC-3FB, NHM-3FB, and PHN-3FBE1.
*There are restrictions on some functions.

Event Occurrence: Execute command (Red, Amber, Green,Lighting , Sound Buzzer)
For PHN compatible commands: 0x57, 0x17

* NH-FV Series does not support sound playback using PHN compatible commands.

**PNS Command Compatibility**

By using PNS commands, you can control all notification patterns.

* PNS commands are the proprietary commands.

NH-FB Series / NH-FV Series
Event Occurrence: Execute command (Red, Amber, Green, Lighting, Sound Buzzer)
For PNS command: 0x58, 0x58, 0x53, 0x00, 0x00, 0x06, 0x01, 0x01, 0x01, 0x00, 0x00, 0x01

NH-FV Series
Event Occurrence: Execute command (Playback message on ch 10)
For PNS command: 58h, 58h, 56h, 00h, 00h, 04h, 01h, 00h, 00h, 10h

### SLMP

Seamless Message Protocol

SLMP, MC protocols supported. You can connect the unit to a CC-Link IE field network.

The unit regularly sends commands to PLCs in the CC-Link IE field network, and can notify you of retrieved data by light, sound, email, and/or trap.

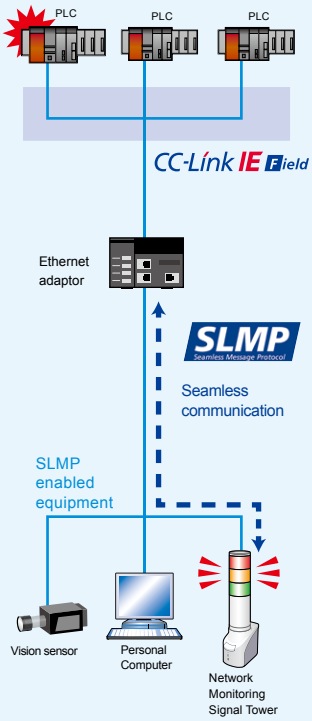


## Detailed Alert Function Settings

### Send e-mail with a maximum of eight events (selectable)

The subject name and text corresponding to a diverse event can be created. It exceeds in the complete e-mail authentication function securely.

**Email transmission**

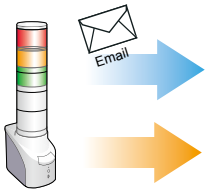


**SNMP v2c**

Can transmit from a maximum of eight locations.

## Easy setup from a web browser

The detailed setup for the Body can be accessed over a web browser to its IP address. Firmware can also be upgraded remotely.

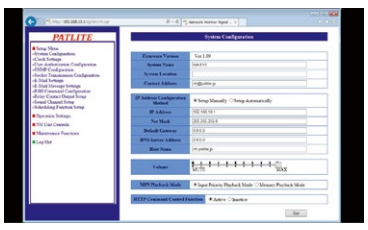

▲ Web Settings screen

### Supports DHCP

Supports DHCP client functions, such as getting network information, IP address for example, from the DHCP server.

# NH-FV Series Examples

## Use for all sorts of cases.

## Remote monitoring of server

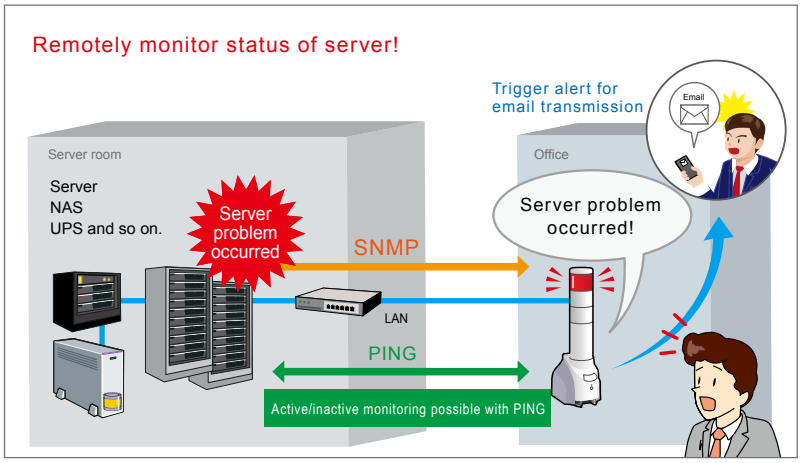


Remotely monitor the status of the server, NAS, UPS and so on. When an error occurs, a command is received via LAN, and the manager is notified as the unit works in conjunction with other equipment (contact input / output). At the same time, email notifying the problem is sent to the specified recipients.

## Notification triggered by printer output

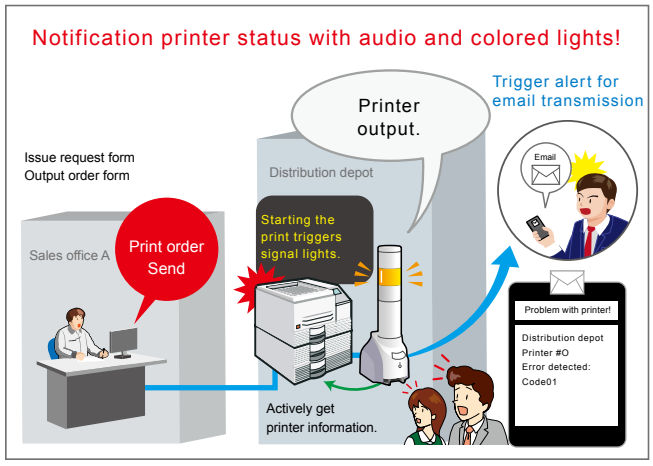


When a process starts from printer output, the person who sends the output is not necessarily the same person who receives the output. In this case, you can use the monitoring function of NH-FV to alert the status of the printer with lights and sound, so that the printout is not left unnoticed.

## Notification based on information from network camera

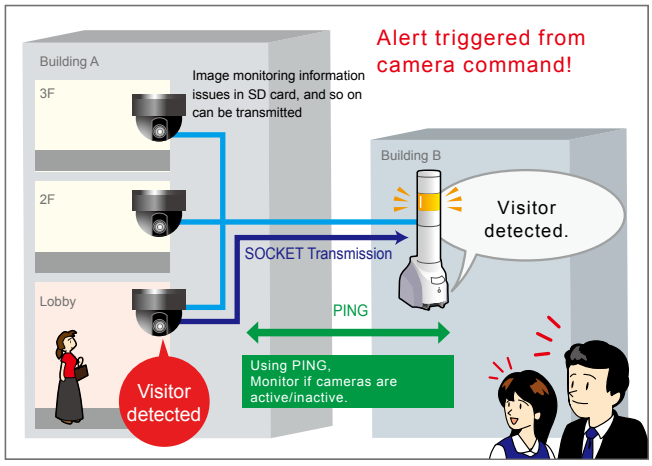


You can turn on the NH Series lights when a camera detects visitors or notify the manager to act quickly. Also, from the NH Series you can monitor if network cameras are active/inactive, ensuring stable operation of the system.

## Notification disaster information

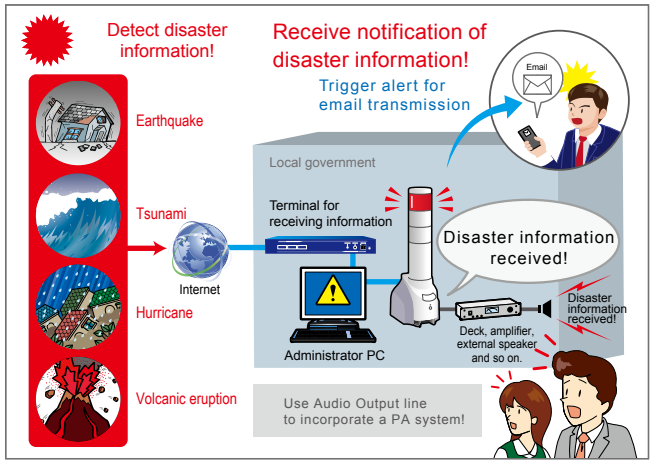


When a natural disaster alert is received, the NH Series can promptly alert you with lights and sound and notify the fire department and local government. By ensuring important information is not overlooked or left unnoticed, you can promote prompt communication with local residents.

## Notification from call center

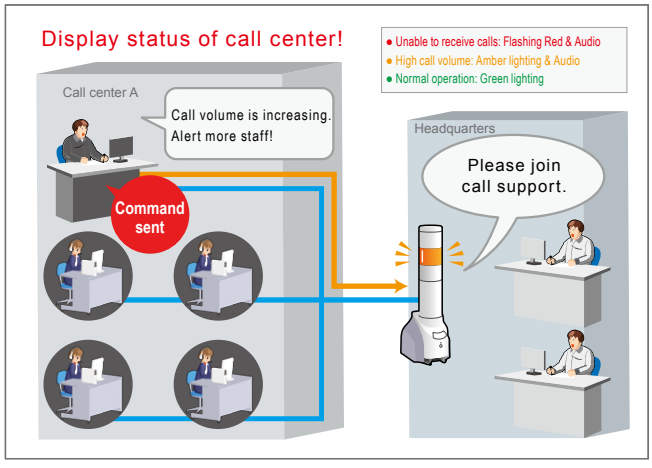


By alerting the operator's call status with signal lights, occurrences of call waiting due to call volume and an absence of operators that cause problems of getting no response can be avoided, promote follow-up by managers, and heighten awareness of operators.

# LA6-POE

LA6-5DTNWB-POE
(direct mount type)

LA6-5DSNWB-POE
(stationary type)

HTTP Commands Supported

- Programmable, multi-color signal towers designed to replace standard stack lights
- Features 21 LED colors and 11 alarm types, all in a single part number
- Ethernet connection with PoE (Power over Ethernet) support, enabling single cable installations

## ■ What is PoE (Power over Ethernet)?

System that passes electric power along with data on twisted pair Ethernet cabling. This allows a single cable to provide both power and data to devices.

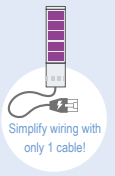


PoE | Ethernet | Easy Web Setup | SOCKET | Signal Light ϕ60 | Multi color | 11 types of electronic sounds | Sound pressure 85dB | IP54* | Modbus/TCP | CE | RoHS | UL | FCC | KC

* Direct Mount only

## Specifications

| Model | | | LA6-5DTNWB-POE (direct mount type) | LA6-5DSNWB-POE (stationary type) |
|---|---|---|---|---|
| Rated Voltage | | | 24V DC | |
| | Power over Ethernet (PoE) | | 48V DC | |
| Operating Voltage Range | | | 24V DC ±10% | |
| | Power over Ethernet (PoE) | | 36 to 57V DC | |
| Rated Current Consumption | | Standard | 0.30A (at 24V DC) 0.18A (PoE: at 48V DC) | |
| | | Maximum | 0.49A (at 26.4V DC) 0.26A (PoE: at 48V DC) | |
| Rated Power Consumption | | Standard | 7.2W (at 24V DC) 8.6W (PoE: at 48V DC) | |
| | | Maximum | 12.9W (at 26.4V DC) 12.5W (PoE: at 48V DC) | |
| Signal Wire Current | | | 420mA / 70mA (at 26.4V DC) 10mA (PoE: at 48V DC) | |
| Ambient Operating Temperature | | | -10 ℃to +50 ℃ | |
| Ambient Operating Humidity | | | 90% RH or less, freezing, no condensation | |
| Storage Ambient Temperature | | | -10 ℃ to +50 ℃ | |
| Storage Ambient Humidity | | | 90% RH or less, freezing, no condensation | |
| Mounting location | | | Indoors | |
| Mounting direction | | | Upright | |
| Protection Rating | | | IP54 (IEC 60529) | IP20 (IEC 60529) |
| | Environmental Conditions | | Mounted in upright position | |
| Vibration Resistance | | | 10 m/s² (JIS C 60068-2-6) | None |
| | Environmental Conditions | | Mounted in upright position | – |
| Mass (Tolerance: ±10%) | | | 630g | 780g |
| Signal Light functions | | | According to LA6, 5 tier, flashing, buzzer type | |
| Interfaces | Power Supply / Contact Input | | Screwless Terminal Block (12 contacts)<br>Wire: 0.2 to 1.5 mm² (solid wire), AWG24 to 16 (stranded wire) | |
| | | | Power Supply: 2 contacts (24V DC) Contact Input (external relay/NPN/PNP): 8 contacts<br>Flashing/Pulse enable common line: 1 contact, COM: 1 contact | |
| | LAN | | RJ-45 connector | |
| | | PoE | IEEE802.3af Class 0 | |
| | | Communication method | Ethernet (IEEE802.3) | |
| | | Physical Layer | 10BASE-T/100BASE-TX (Auto-MDI/MDIX) | |
| | | Data Link Layer | CSMA/CD | |
| | | Network Layer | IP・ARP・ICMP | |
| | | Transport Layer | TCP/UDP | |
| | | Application Layer | HTTP・DHCP・Modbus/TCP・Socket (PHN・PNS command) | |
| | USB | | USB micro-B socket, USB 2.0 | |
| Operation Unit | | | Setting button (in the head cover) | Setting button (in the head cover)<br>Clear Switch |
| Indicator Light | | | None | 1 (Green): Integrated in the Clear Switch<br>*Always on when power is on |
| Various Settings | | | Change via Web Setup Tool | |
| Operation Method | | | Signal Wire Control/Command Control | |
| Supported LAN Cable | | | Category 5e or higher (compatible with both straight-cable and cross-cables) | |
| Conformity standards | | | RoHS Directive (EN 50581)<br>EMC Directive (EN61000-6-4, EN61000-6-2, EN55032 Class A, EN55024)<br>FCC Part15 Subpart B Class A<br>KC (KN 61000-6-4, KN 61000-6-2)<br>UL 508, CSA-22.2 No.14, Recognized Component (File No.E215660)<br>※Only for DC24V type<br>UL 60950-1, CAN/CSA C22.2 No. UL60950-1-07 Recognized Component<br>(File No.E480103) | |
| References | | | Conforms to CE Marking | |

## Model Code

# LA6-5DTNWB-POE

- Model
- LED Tiers
- Rated Voltage: Rated Voltage is 24V DC
- Extended Functionality: PoE supported
- Flashing/Buzzer availability: B Flashing and Buzzer available
- Body Color: W Off-white
- Mounting: TN Direct Mount; SN Stationary

## Dimensions (mm)

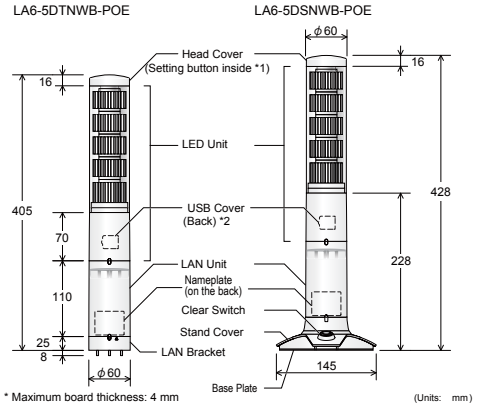


## Wiring Diagram

### Terminal Block Connector Pin Arrangement

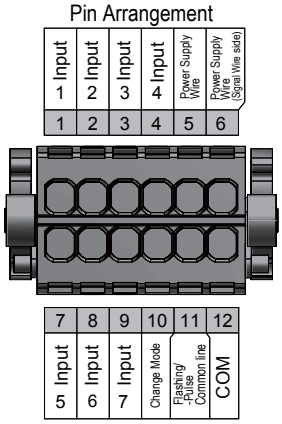


### 24V DC model

External Contact Classification: Contact Relay

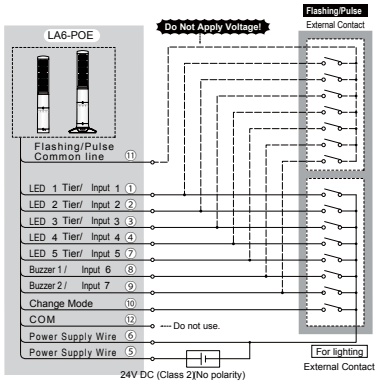


### 24V DC model

External Contact Classification: PLC (NPN transistor)

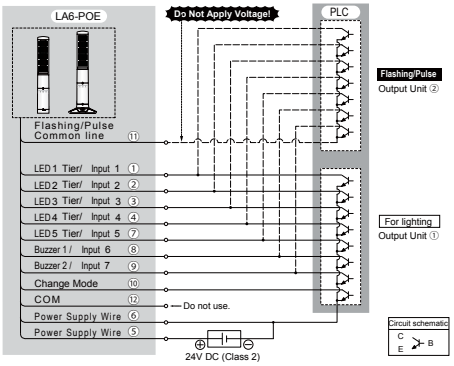


### 24V DC model

External Contact Classification: PLC (PNP transistor)

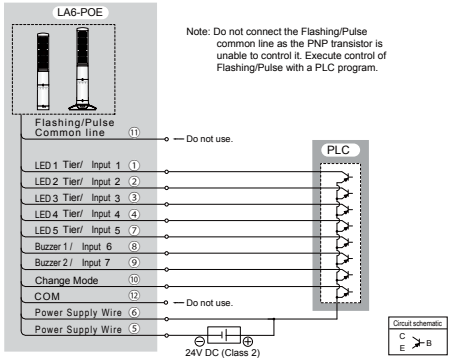


### PoE Input Specifications

External Contact Classification: Contact Relay

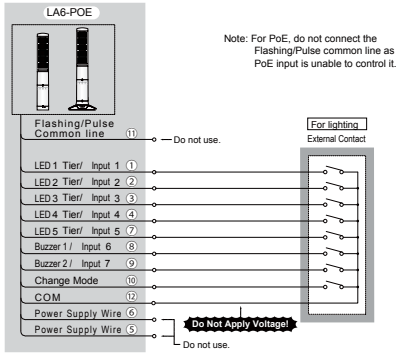


## Optional Parts

Stationary installation bracket (magnetic installation)
Model: SZW-060W
Supported type:
LA6-5DTNWB-POE
LA6-5AWJWB-RYGBC

Wallmount Bracket (embedded wiring type)
Model: SZK-003W
Direct Mounting

Wallmount Bracket
NH-WST2
Stationary Type

Pole Bracket
SZP-004W

Circular Bracket
SZ-016A

mounting Pole
SZ-010

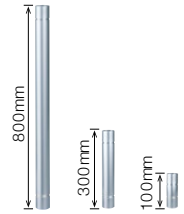


POLE-100 / 300 / 800A21

# Communication Commands

## Control with HTTP Commands

You can send commands via HTTP communication to control all notification patterns.

■ Detailed Motion Control (You can control tier 1 to 5 of LED unit specifying colors.)

Execute command
(Tier 1: Green, Tier 2: Blue, Tier 3: Off, Tier 4: White, Tier 5: Red, Flashing off, Buzzer: Pattern 11)
http://192.168.10.1/api/control?color=46091&buzzer=11

■ Smart Control Command (you can control the smart mode set up in the editing software.)

Execute command (Run smart mode group No.10)
http://192.168.10.1/api/control?smart=10

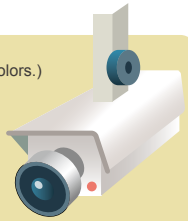

Network Camera

NVR

## SOCKET Communication

### PNS Commands supported

By using PNS commands, you can control all notification patterns.

■ Detailed Motion Control (You can control tier 1 to 5 of LED unit specifying colors.)

Execute command
(Tier 1: Green, Tier 2: Blue, Tier 3: Off, Tier 4: White, Tier 5: Red, Flashing off, Buzzer: Pattern 11)
41H, 42H, 44H, 00H, 00H, 07H, 04H, 06H, 00H, 09H, 01H, 00H, 0BH

■ Smart Mode Control Command (you can control the smart mode set up in the editing software.)

Execute command (Run smart mode group No.10)
41H, 42H, 54H, 00H, 00H, 01H, 0AH

### PHN compatible commands supported

Control with 2-byte commands is available.

Execute command
(Tier 1: Lighting, Tier 2: Flashing, Tier 3: Off, and Buzzer: Pattern 2)
57H, 51H

* You can control lighting, flashing, and 2 types of buzzer sound patterns on tiers 1 to 3.

## Modbus/TCP

You can control the signal light by sending Modbus/TCP commands, such as from a PLC.

■ Smart control command (you can control the smart mode set up in the editing software.)

Execute command
(When operating the Signal Tower in Smart Mode group number 15.)
00H, 00H, 00H, 00H, 00H, 06H, 01H, 06H, 00H, 06H, 01H, 0FH

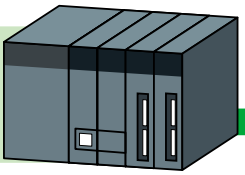

PLC

# PHE-3FB3

- Signal tower features 3 LED colors and 2 flashing patterns
- Send ASCII commands over USB or RS-232C to control built-in signal tower
- Receive power over USB or a 24V DC supply source
- 4 built-in alarm sounds with adjustable volume up to 80 dB
- Built-in "Clear" button for quickly reverting the PHC to "default state" once an alert is confirmed

Signal Tower ϕ40 | Electronic sound 4tones | Buzzer 80dB | Flashing 2Patterns | USB | CE | RoHS | UL | FCC | KC

* N Type only

* N Type only

## Specifications

| Model | PHE-3FB3-RYG / PHE-3FB3N-RYG (AC adaptor not included) | |
|---|---|---|
| Rated Voltage | Main Unit | 24V DC, 5V DC (USB bus power) |
| | AC Adaptor | Input: 100-240V AC (50/60Hz), Output: 24V DC |
| Operating Voltage Range | 90 - 264V AC (When using AC adaptor) | |
| Rated Power Consumption | Standby mode | 1.2W (at 100V AC) |
| | Operating at Maximum | 4.4W (at 100V AC) |
| Ambient Operating Temperature | 0-+40 degree (Celsius) | |
| Ambient Operating Humidity | 20%-85% RH (no condensation) | |
| Mounting location / direction | Indoors, Upright | |
| Protection Rating | IP20 | |
| Mass | 545g (not including adaptor) | |
| Interface | USB port | Conforms to USB 2.0 (bus power support), Standard B type (female) |
| | Serial port | Conforms to RS-232C, D-Sub 9-pin (male) |
| Signal Tower * | Red, Amber, Green, Clear Lens | |
| Audible sound pressure | 80dB or more (at a distance of 1m, in front of Main Unit) | |
| Accessory | AC adaptor (except N type), installation manual, rubber feet | |
| Supported operating systems | Windows®7 (32bit, 64bit), Windows®8 (32bit, 64bit), Windows®8.1 (32bit, 64bit), Windows®10 (32bit, 64bit), Windows Server® 2008 R2, Windows Server® 2012, Windows Server® 2012 R2 | |

* When operating on USB bus power, signal light is not as bright.

## Dimensions (mm)

■ PHE-3FB3

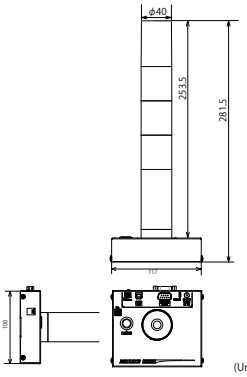


(Units: mm)

■ AC adaptor enclosed (except N type)

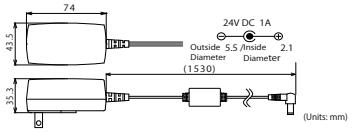


(Units: mm)

■ Wiring for RS-232C port

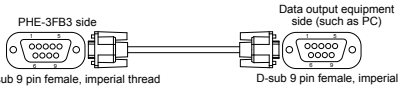


* RS-232C straight cable is not included in this product. Please provide your own.

| Signal name | Pin number | | Pin number | Signal name |
|---|---|---|---|---|
| TXD | 2 | ⟷ | 2 | RXD |
| RXD | 3 | ⟷ | 3 | TXD |
| GND | 5 | ⟷ | 5 | GND |
| CTS | 7 | ⟷ | 7 | RTS |
| RTS | 8 | ⟷ | 8 | CTS |

## Model Code

**PHE-3FB3□-RYG**

AC Adaptor
Blank: AC adaptor included
N: AC adaptor not included

### Adjusting Buzzer Volume

■ Using enclosed Sound Reduction sheet
Please attach the Sound Reduction sheet on top of the Buzzer Unit.

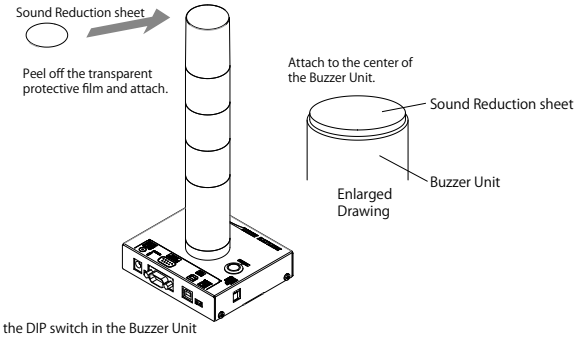


■ Using the DIP switch in the Buzzer Unit
As shown below, please turn on the DIP switch 1 and 3 in order to reduce sound volume.

Buzzer Unit Bottom View — Do not set DIP switches on the Buzzer Unit other than shown below.

■ Normal mode (Factory setting)

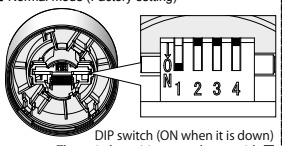


DIP switch (ON when it is down)
The switch positions are shown with ■.

DIP switch

| 1 | 2 | 3 | 4 |
|---|---|---|---|
| ON | OFF | OFF | OFF |

■ Sound Reduction mode

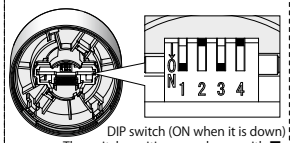


DIP switch (ON when it is down)
The switch positions are shown with ■.

DIP switch

| 1 | 2 | 3 | 4 |
|---|---|---|---|
| ON | OFF | ON | OFF |

## Optional Parts

Dimmer Film
NHP-TF (for NHP-FV2/FB2/PHE-3FB3)

Interface Converter

# NBM-D88NN

HTTP Commands Supported | CE | RoHS | UL | FCC

8 discrete input and output channels to add non-network PATLITE signaling devices to an equipment network

Email Alerts – Send emails to up to 8 addresses per alert notification

Supports SNMP, HTTP, PNS (Developed by PATLITE), Socket Transmission command protocols

Use a web browser to send commands via the Hypertext Transfer Protocol (HTTP)

Ping up to 24 nodes or devices on your network

Built-in "Clear" button for quickly reverting the NBM to its initial state once an alert is confirmed

## Optional Parts

| Optional Parts | Model |
|---|---|
| Server Rack Angle Mount | NBM-ANG |
| AC Adaptor | ADP-001 |

## Specifications

| Item | | Specifications | |
|---|---|---|---|
| Model | | **NBM-D88NN** | |
| Main Unit Rated Voltage | | 24V DC | |
| AC Adaptor | Rated Voltage | 100 - 240V AC (50/60Hz) | |
| | Operating Voltage Range | 90 - 264V AC (50/60Hz) | |
| Power Consumption | | 14W | |
| Operation Temperature Range | | 0 to 40℃ (no freezing, no condensation) | |
| Storage Temperature Range | | - 20 to 65℃ (no freezing) | |
| Operation Humidity | | 20 - 80% RH (no condensation) | |
| Insulation Resistance | | Between current carrying metallic part and non-current carrying metallic part: 500V DC 10MΩ or more | |
| Withstand Voltage | | Between current carrying metallic part and non-current carrying metallic part: 1500V AC 10mA or less (for one minute) | |
| Vibration Resistance | | 9.8m/s2 | |
| Communication method | | LAN communication | |
| | | Physical Layer: Ethernet (IEEE 802.3 compliant) 10BASE-T / 100BASE-TX (auto-negotiation) Connector type RJ-45 8-pin | |
| | | Data Link Layer: CSMA/CD method | |
| | | Network Layer: IP, ARP, ICMP | |
| | | Transport Layer: TCP, UDP | |
| | | Application Layer: HTTP, NTP, Socket (PHN, PNS) SMTP, SNMP (V1, V2C), DHCP, DNS, POP3, RSH | |
| Non-Voltage Contact Output (Normally Open Contact) | Number of Contacts | 8 points | |
| | Contact rating | Port 1-7: 125V AC, 3A/30V DC, 3A Inrush Current 5A or less Minimum current 1mA (reference value) Minimum voltage 5V DC (reference value) | |
| | | Port 8: 125V AC, 3A/30V DC, 3A Inrush Current 78A or less (TV-5 rating) Minimum current 10mA, Minimum voltage 5V DC | |
| | Supported Wire Diameter | Solid Wire: ϕ0.4 - 1.2mm (AWG26-16) Stranded Wire: 0.2 - 1.25mm² (AWG24-16) | |
| | Wire connection method | Screwless Terminal Block | |
| Contact input (Normally Open Contact) | Input specifications | D88N (NPN model) | |
| | Supported number of input contacts | Non-Voltage Contact, NPN transistor | |
| | Number of Contacts | 8 points | |
| | Contact rating | Output ON current 6mA or less per port Voltage between terminals when OFF: 24V | |
| | Supported Wire Diameter | Solid Wire: ϕ0.4 - 1.2mm (AWG26-16) Stranded Wire: 0.2 - 1.25mm² (AWG24-16) | |
| | Wire connection method | Screwless Terminal Block | |
| USB (host) | | USB2.0/1.1 TYPE-A 1 port for log data storage, firmware update For config data upload / download | |
| Power output | | Screw terminal block, 1 point, 24V DC±10% Maximum 200mA | |
| D-sub 9-pin | | Extended Functionality | |
| LED Display Area | | Green LED 18 points ( 1 point for power, 1 point for status, DO 8 points, DI 8 points | |
| Operation | | Select Switch, Reset Switch, Clear Switch, Mode Switch | |
| Standard | | EMC Directives (EN55032 (Class A), EN55024), RoHS Directive EN50581, FCC Part15 Sub part B Class A | |
| Mounting location | | Indoors | |
| Mounting Methods | | Stationary, EIA rack mount (optional part) | |
| Mounting direction | | Upright | |
| Mass | Main Unit | 1150g | |
| | AC Adaptor | 165g | |
| Protection Rating | | IP20 | |
| Accessory | | AC Adaptor, Instruction Manual, 4 rubber feet | |
| Optional Parts | | Server Rack Angle Mount | |

## Dimensions (mm)

○ Main Unit

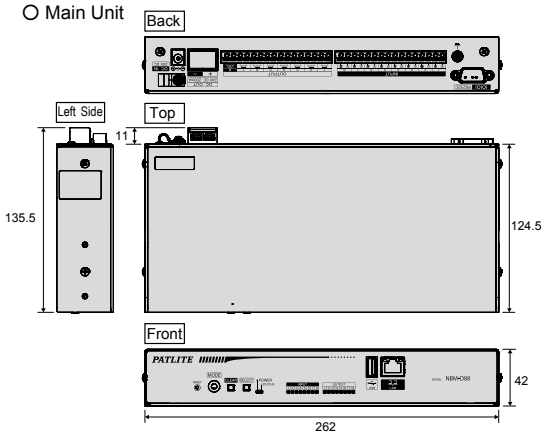


### Server Rack Mounting

Server Rack Angle Mount
NBM-ANG (optional)

### AC Adaptor

AC Adaptor
ADP-001 (optional)

## Monitoring Function

Ping 24

### PING monitoring

Active/inactive monitoring of up to 24 nodes.

SNMP v1.v2c

### TRAP monitoring

SNMP Manager function is included.

- The unit can determine down to variable-bindings.
- You can register 16 groups (4 nodes per group).

### Application Monitoring

You can run active/inactive monitoring with the application's send command.
(Maximum 4 nodes)

- Server monitoring
- Printer problem detection
- Server/PC application monitoring

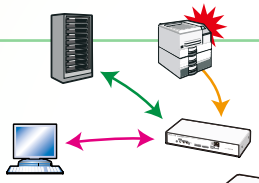

## Command Transmission

RSH

### RSH command transmission (8)

You can create RSH commands suitable for events.

SNMP v2c

### SNMP, TRAP transmission (8)

You can send SNMP / TRAP suitable for events.

SOCKET Communication

### SOCKET Transmission

You can send commands of up to 30 bytes

Email

### Send up to 8 emails

You can create titles and body text suitable for events.
POP / SMTP authentication supported.

- Control network equipment
- Event notifications to monitoring server
- Send PHN / PNS commands, and so on.

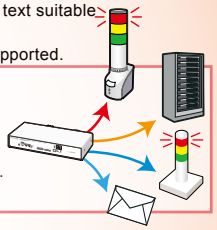

## Command Control

RSH

You can control digital output with the generic protocol RSH.

SOCKET Communication

### PHN compatible commands supported

Control of digital output possible with 2-byte commands.

### PNS commands supported

By using PNS commands, you can control digital output.

HTTP Command

You can control digital output with HTTP commands.
Execute command (port 1: ON, port 3: OFF, Other: no operation)
http://192.168.10.1/api/control?/alert=19099999

- Server command control
- Receive PHN/PNS Commands
- Control commands from network camera

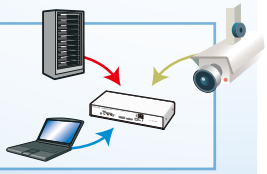

## Contact Input/Output

Digital Input 8

### Digital input: 8 points

Digital Output 8

### Digital output: 8 points

With 8 input terminals and 8 output terminals, you can independently control various equipment that have input contacts.

24V Output

The converter has one 24V output.
You can connect the converter with various notification equipment, such as Revolving Lights and audio equipment.

USB

You can get the log from USB memory.
You can get settings from USB memoy, or apply settings to USB memory.

- Contact inputs from sensors
- Contact outputs to notification equipment
- Control with contact outputs, and so on.

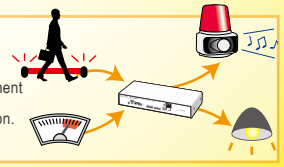

* PHN/PNS commands are proprietary control commands.

## Condition Setting function

It can be set up with a detection condition of a digital input.

**Duration Condition** — The output condition setup is combined with input signal time progression.

**AND condition** — The output condition setup is combined with the number of input channels for a logical condition.

**Input Frequency Condition** — The output condition setup is combined with the increase of frequency signal inputs.

By setting up the operation when detection conditions are met, it can be used for various environments and applications.
(Notications according to preset temperatures, using a temperature sensor; notication of the infrared sensor, specied by area, etc.)
• The duration condition, AND condition and number condition can be set.

Available condition setting function operations

| | |
|---|---|
| Digital Output Control | The digital output will be ON or OFF. |
| RSH Command Transmission | Sends the remote shell command to the device at the set address |
| Socket Transmission | Sends the PHN/PNS Command to the device at the set address |
| Trap Transmission | Sends the SNMP trap to the device at the set address |
| E-mail Transmission | Sends the E-mail to the set mail server. |

# PHC-D08N

- Send ASCII commands over USB or RS-232C to control PATLITE signaling devices
- Receive power over USB or a 24V DC supply source
- Built-in "Clear" button for quickly reverting the PHC to "default state" once an alert is confirmed

24V DC power output | USB | RoHS | CE | UL | FCC

## Specifications

| Model | PHC-D08N (without AC adaptor) | |
|---|---|---|
| Operating Voltage Range | 90 - 264V AC (When using AC adaptor) | |
| Rated Power Consumption | Standby mode | 0.4W (at 100V AC) |
| | Operating at Maximum | 16W (at 100V AC) |
| Ambient Operating Temperature | 0-+40 degree (Celsius) | |
| Ambient Operating Humidity | 20%-85% RH (no condensation) | |
| Mounting location / direction | Indoors, Upright | |
| Protection Rating | IP20 | |
| Mass | 370G (±10%) | |
| Interface | USB port | Conforms to USB 2.0 (bus power support), Standard B type (female) |
| | Serial port | Conforms to RS-232C, D-Sub 9-pin (male) |
| External Contact Output | Number of Contacts | 8 points |
| | Contact specifications | Non-Voltage Contact Output / Normally Open Contact |
| | Contact rating | 30V DC/3A |
| Power output* | Output rating | 24V DC / 500mA or less |
| Accessory | AC adaptor (except N type), installation manual, rubber feet | |
| Supported operating systems | Windows®7 (32bit, 64bit), Windows®8 (32bit, 64bit), Windows®8.1 (32bit, 64bit), Windows®10 (32bit, 64bit), Windows Server® 2008 R2, Windows Server® 2012, Windows Server® 2012 R2 | |

* You cannot use the power output terminal when AC adaptor is disconnected. When using the power output terminal, confirm the AC adaptor is connected.

## ■ Communication Specifications

* For details see the Instruction Manual, which you can download from our website.

### Communication Data Format

| | | Header | ID | Command | Data | Encoding |
|---|---|---|---|---|---|---|
| Transmission Data | ASCII code [HEX value] | @ [40H] | ?? [3FH 3FH] | See command list | Depending on the command | ! [21H] |
| Number of Bytes | | 1 byte | 2 bytes | 1 byte | 0-8 bytes | 1 byte |

### Command list

| Command | Number of Bytes for Data portion | Function |
|---|---|---|
| 1 [31H] | 2 bytes | Turn ON the specified output terminal. |
| 0 [30H] | 2 bytes | Turn OFF the specified output terminal. |
| ? [3FH] | 2 bytes | Changes ID. |
| S [53H] | 8 bytes | Control each output terminal to the specified status. |
| G [47H] | 0 bytes | Get the output terminal status. |
| C [43H] | 0 bytes | Turn OFF all output terminals. |
| M [4DH] | 0 bytes | Get the product information |

- Commands 1 and 0 are compatible with the Personal Computer Output Relay Unit PHC-100A.
- Command S can control ON/OFF of the output terminal at the same time.

### Transmission example (turning on 2, 5, and 6 on the output terminal block)

| Transmission Data | | | | | | |
|---|---|---|---|---|---|---|
| Header | ID | | Command | Data | | End code |
| @ [40H] | ? [3FH] | ? [3FH] | 1 [31H] | 3 [33H] | 2 [32H] | ! [21H] |

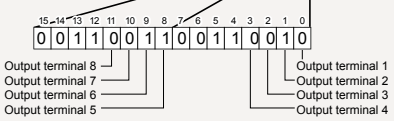


## Dimensions (mm)

■ PHC-D08N

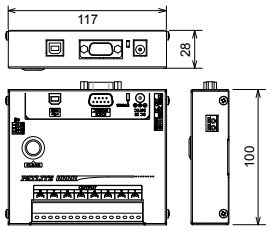


■ Wiring for RS-232C port

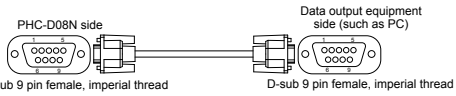


* RS-232C straight cable is not included in this product. Please provide your own.

| Signal name | Pin number | | Pin number | Signal name |
|---|---|---|---|---|
| TXD | 2 | — | 2 | RXD |
| RXD | 3 | — | 3 | TXD |
| GND | 5 | — | 5 | GND |
| CTS | 7 | — | 7 | RTS |
| RTS | 8 | — | 8 | CTS |

## Optional Parts

| Optional Parts | Model |
|---|---|
| AC Adaptor | ADP-001 |

AC Adaptor
ADP-001 (optional)

## Application examples

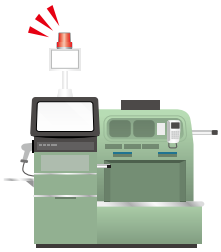

Self-service checkout

Ticket vending machine

# LED Signal Tower Series'

| Page number | Page 55 | Page 61 | | |
|---|---|---|---|---|
| Model Name | Programmable LED Signal Tower | Modular LED Signal Tower | | |
| Model | **LA6** | **LR4** | **LR5** | **LR6** |
| Product image | | | | |
| Rated Voltage | 24V DC / 100 - 240V AC | 24V DC / 100 - 240V AC | 12V DC / 24V DC | 24V DC / 100 - 240V AC |
| Size (mm) | ϕ60 | ϕ40 | ϕ50 | ϕ60 |
| IP | 65 (54 for B) | 65 (54 for LJ type) | 65 (54 for LJ type) | 65 (54 for LJ type) |
| Buzzer sound pressure in dB (at a distance of 1m) | 85 | 85 | 80 / 85 | 88 |
| Body | ABS | Polycarbonate | Polycarbonate | Polycarbonate |
| Globe | PC | Polycarbonate | Polycarbonate | Polycarbonate |
| Light Source | LED | LED | LED | LED |
| Unit structure *1 | | ◎ | ◎ | ◎ |
| Terminal Block | ○ | | ○ (Body Unit) | |
| Open collector | NPN/PNP | NPN/PNP / NPN | NPN/PNP | NPN/PNP / NPN |
| CE Marking | ○ | ○ | ○ | ○ |
| RoHS | ○ | ○ | ○ | ○ |
| UL Standard | ○ 24V model only | ○ | ○ | ○ |

| Page number | Page 77 | Page 79 | Page 81 | Page 83 | Page 85 |
|---|---|---|---|---|---|
| Model Name | Signal Tower with switch box | Slim LED Signal Tower | Slim LED Signal Tower | Slim LED Signal Tower | LED Signal Tower |
| Model | **HSST** | **ME-A/ MES-A** | **MP/MPS** | **MP-C/MPS-C** | **LS7** |
| Product image | | | | | |
| Rated Voltage | 100 - 240V AC* | 24V DC | 24V AC/DC | 24V DC | 24V DC |
| Size (mm) | ϕ50 | ϕ25 | ϕ30 | ϕ30 | ϕ70 |
| IP | 54 (20 switch box) | 42 | 65 | 65 | 65 (54 for FB and B) |
| Buzzer sound pressure in dB (at a distance of 1m) | | | | | 85 |
| Body | Polycarbonate | Aluminum | ABS | ABS | ABS |
| Globe | Polycarbonate | Polycarbonate | AS | AS | AS |
| Light Source | LED | LED | LED | LED | LED |
| Unit structure *1 | ◎ | ○ | ○ | ○ | |
| Terminal Block | | | | | |
| Open collector | | NPN | ○ (DC only) | ○ | ○ |
| CE Marking | | ○ | ○ | ○ | ○ |
| RoHS | ○ | ○ | ○ | ○ | ○ |
| UL Standard | ○ | ○ | ○ | ○ | ○ |

*1◎: One-touch unit structure ○: Unit structure * With AC adaptor

| Page number | Page 61 | Page 88 | | | Page 90 | Page 93 | | Page 95 | | |
|---|---|---|---|---|---|---|---|---|---|---|
| Model Name | Modular LED Signal Tower | Large LED Signal Tower | | | Wall-Mounted LED Signal Tower | Wall-Mounted LED Signal Tower | | Modular Signal Tower | | |
| Model | **LR7** | **LGE** | | | **WE/WEP** | **WME-D** | | **KUS** | | |
| Product image | | | | | | | | | | |
| Rated Voltage | 24V DC | 24V AC/DC | 100V AC | 220V AC | 24V AC/DC | 24V DC | 100 - 240V AC | 24V AC/DC | 100V AC | 220V AC |
| Size (mm) | ϕ70 | ϕ100 | | | W90 x D37.5 | W70 x D80 | | □70 | | |
| IP | 65 | 54 | | | 65 (54 for FB) | 54 | | 54 | | |
| Buzzer sound pressure in dB (at a distance of 1m) | 90 | 85 | | | 90 | 90 | | 80 | | |
| Body | Polycarbonate | ABS | | | ABS | Polycarbonate | | ABS | | |
| Globe | Polycarbonate | Polycarbonate | | | Polycarbonate | Polycarbonate | | Polycarbonate | | |
| Light Source | LED | LED | | | LED | LED | | LED / Bulb | | |
| Unit structure *1 | ◎ | ○ | | | | ○ | | ○ | | |
| Terminal Block | ○(Body Unit) | | | | | | | | | |
| Open collector | NPN/PNP | ○ (DC only) | | | ○ (DC only) | NPN/PNP | NPN | ○(C and FC model) | | |
| CE Marking | ○ | ○ | | | ○ | ○ | | | | |
| RoHS | ○ | | | | ○ | ○ | | KUS-24 (F)○ | | |
| UL Standard | ○ | | | | ○ | ○ | | ○ | | |

*1◎: One-touch unit structure ○: Unit structure

* For specifications, see the product page.

# LA6



## ■ 24V DC model

Off-white Silver — Lighting type*

Off-white Silver — Flashing, buzzer type

Off-white Silver — Lighting type*

Off-white Silver — Flashing, buzzer type

* In Smart Mode you can use the flashing operation.

## ■ 100 - 240V AC model

Off-white

Flashing, buzzer type

Steel pole type (LJ)

Sound pressure 85dB | IP65 (Buzzer model IP54) | RoHS | UL (24V model only)

CE | 60 ϕ | FCC (24V model only) | KC (24V model only)

| | |
|---|---|
| Colors | Signal Tower Mode: 9 colors / Smart Mode: 21 colors |
| Globe | Polycarbonate resin, high shock resistance and heat resistance |

Ultra-bright multi-color LEDs capable of producing 21 distinct colors.
Built-in audible alarm is capable of producing 11 distinct tones.
Single part number - streamlines your supply chain.
Smart Mode allows users to create light motion patterns to more clearly define more complex equipment statuses.
USB port to locally program device.
Available in DC24V and AC100-240V (M2 type)

## ■ Examples

- **Display duration of equipment down-time** - Raise awareness to decrease non-operational time
- **Display time remaining for automated equipment process** - Reduce stress of workers responsible for multiple equipment
- **Display takt time for an assembly line** - Stabilize quality by leveling work speed
- **Display the work speed for manual process lines** - Raise awareness of the number of processes involved by displaying takt time
- **Display remaining material by combining sensors** - Assist with refills of outdoor tanks or cutting oil
- **Display detailed information on the equipment status** - Remotely review information shown on the operation panel

| Model | Rated Voltage | LED Tiers | Body Color | Specifications |
|---|---|---|---|---|
| **LA6-3DTNWB-RYG** | 24V DC | 3 tiers | Off-white | Direct mount, terminal block, with buzzer |
| **LA6-3DTNWN-RYG** | | | Off-white | Direct mount, terminal block, without buzzer |
| **LA6-3DTNUB-RYG** | | | Silver | Direct mount, terminal block, with buzzer |
| **LA6-3DTNUN-RYG** | | | Silver | Direct mount, terminal block, without buzzer |
| **LA6-3DLJWB-RYG** | | | Off-white | L-type Pole, Cabtyre, with buzzer |
| **LA6-3DLJWN-RYG** | | | Off-white | L-type Pole, Cabtyre, without buzzer |
| **LA6-3DWJWB-RYG** | | | Off-white | Direct mount, Cable, with buzzer |
| **LA6-3DWJWN-RYG** | | | Off-white | Direct mount, Cable, without buzzer |
| **LA6-3DWJUB-RYG** | | | Silver | Direct mount, Cable, with buzzer |
| **LA6-3DWJUN-RYG** | | | Silver | Direct mount, Cable, without buzzer |
| **LA6-5DTNWB-RYGBC** | | 5 tiers | Off-white | Direct mount, terminal block, with buzzer |
| **LA6-5DTNWN-RYGBC** | | | Off-white | Direct mount, terminal block, without buzzer |
| **LA6-5DTNUB-RYGBC** | | | Silver | Direct mount, terminal block, with buzzer |
| **LA6-5DTNUN-RYGBC** | | | Silver | Direct mount, terminal block, without buzzer |
| **LA6-5DLJWB-RYGBC** | | | Off-white | L-type Pole, Cabtyre, with buzzer |
| **LA6-5DLJWN-RYGBC** | | | Off-white | L-type Pole, Cabtyre, without buzzer |
| **LA6-5DWJWB-RYG** | | | Off-white | Direct mount, Cable, with buzzer |
| **LA6-5DWJWN-RYG** | | | Off-white | Direct mount, Cable, without buzzer |
| **LA6-5DWJUB-RYG** | | | Silver | Direct mount, Cable, with buzzer |
| **LA6-5DWJUN-RYG** | | | Silver | Direct mount, Cable, without buzzer |
| **LA6-5AWJWB-RYGBC** | 100 - 240V AC | | Off-white | Direct mount, Cabtyre, with buzzer |

## Specifications

| Model | LA6-□□□□□-□ (see model code) | | | | LA6-5AWJWB | |
|---|---|---|---|---|---|---|
| Rated Voltage | 24V DC | | | | 100 - 240V AC (50Hz / 60Hz) | |
| Operating Voltage Range | Rated Voltage ±10% | | | | 90 - 250V AC (50Hz/60Hz) | |
| Rated Power Consumption (Standard) | LA6-5D□□N-RYGBC | 5W | LA6-5D□□B-RYGBC | 6.5W | LA6-5AWJWB-RYGBC | 6.5W |
| | LA6-3D□□N-RYG3.5W | | LA6-3D□□B-RYG4.5W | | | |
| Rated Power Consumption (Maximum) | LA6-5D□□N-YYYYY7W | | LA6-5D□□B-YYYYY8W | | LA6-5AWJWB-YYYYY | 7.5W |
| | LA6-3D□□N-YYY4.5W | | LA6-3D□□B-YYY5.5W | | | |
| Environmental Conditions | Buzzer sound: No.1, maximum volume | | | | | |
| Signal Wire Current | Maximum 70mA | | | | Maximum 20mA | |
| Ambient Operating Temperature | -25℃ to +60℃ | | | | | |
| Storage Ambient Temperature | -25℃ to +60℃ | | | | | |
| Mounting location | Indoors | | | | | |
| Protection Rating | IP65 (buzzer model: IP54) IEC 60529 | | | | | |
| Environmental Conditions | Mounted in upright position | | | | | |
| Display color | Red (1000mcd), amber (1700mcd), green (2600mcd), blue (1000mcd), white (1250mcd) | | | | | |
| | purple (800mcd), pink (850mcd), lemon yellow (2150mcd), sky blue (2150mcd) | | | | | |
| Flashing Rate | 60±2 /minute | | | | | |
| Buzzer Sound (Frequency Typ) | No.1 | 2400Hz Beep (continuous beep) | No.2 | 2400Hz Fast Intermittent (beep 0.05 sec. / off 0.05 sec.) | | |
| | No.3 | 2400Hz Slow Intermittent (beep 1.5 sec. / off 1.5 sec.) | No.4 | 2400Hz Medium Intermittent (beep 0.5 sec. / off 0.5 sec.) | | |
| | No.5 | 3600Hz Beep (continuous beep) | No.6 | 3600Hz Fast Intermittent (beep 0.05 sec. / off 0.05 sec.) | | |
| | No.7 | 3600Hz Slow Intermittent (beep 1.5 sec. / off 1.5 sec.) | No.8 | 3600Hz Medium Intermittent (beep 0.5 sec. / off 0.5 sec.) | | |
| | No.9 | 2400Hz & 3375Hz Fast Alternating Intermittent (0.25sec/0.25sec) | No.10 | 2400Hz & 3600Hz Fast Alternating Intermittent (0.25sec/0.25sec) | | |
| | No.11 | 4000Hz & 4800Hz Medium Alternating Intermittent (0.5sec/0.5sec) | | | | |
| Sound Pressure Level | Maximum: 85dB | | | | | |
| Environmental Conditions | Buzzer sound No.1, in front of the buzzer aperture at a distance of 1 m | | | | | |
| Volume Control | Four setting levels (Factory default: Maximum) | | | | | |
| Data Transmission Interface: Main Unit | USB micro-B socket, Female<br>USB2.0 / 1.1 interface, Transmission rate: USB2.0 / 1.1 / 1.0 | | | | | |
| Data Transmission Interface: Transmission Cable | Micro USB Cable (not included), Data Communication / Charging Cable<br>Connector Type: USB (Type A) Male - USB (micro-B) Male | | | | | |
| Data Creation Application Software | Proprietary Application Software (Download from our website) | | | | | |
| Mass (±10%) | LA6-3DTN□ | 480g | LA6-5DTN□B | 590g | LA6-5AWJWB | 740g |
| | LA6-3DTN□N | 420g | LA6-5DTN□N* | 530g | | |
| | LA6-3DWJ□ | 450g | LA6-5DWJ□B* | 560g | | |
| | LA6-3DWJ□N | 400g | LA6-5DWJ□N | 510g | | |
| | LA6-3DLJ□ | 980g | LA6-5DLJ□B | 1090g | | |
| | LA6-3DLJ□N | 930g | LA6-5DLJ□ | 1040g | | |
| Conformity standards | UL508, CSA-C22.2 No. 14 | | EMC Directives EN 61000-6-4, EN 61000-6-2 | | EMC directives EN61000-6-3, EN61000-6-2 | |
| | FCC Part15 Subpart B Class A | | KC (KN 61000-6-4, KN 61000-6-2) | | Low Voltage Directives IEC/EN 60947-5-1, EN62471 | |
| | RoHS Directive EN 50581 | | | | RoHS Directive EN 50581 | |
| References | Conforms to CE Marking<br>UL Recognized Component (File No.E215660) | | | | Conforms to CE Marking | |

* Overseas only

# New Information Display Style

A new concept is born for the Information Display Terminal.
Previous products notified us of the status of equipment with lights and sound only. But with our new products, you can also display the equipment operation process.
As the CPU is embedded in the Main Unit, our new units do not require an external control program. By combining a maximum 21 luminous colors, 3 operating modes, and 11 buzzer sounds, you can display all kinds of information, such as time, amounts remaining, and levels.
As a result, without a large capital investment you can overcome challenges such as "managing the cycle time of equipment" and "visualizing non-operating time", which are common pain-points for manufacturing sites.
An information display terminal for the visualization age, the LA6 can solve –with your imagination– all sorts of problems.

Display Results

## Traditional Information Display

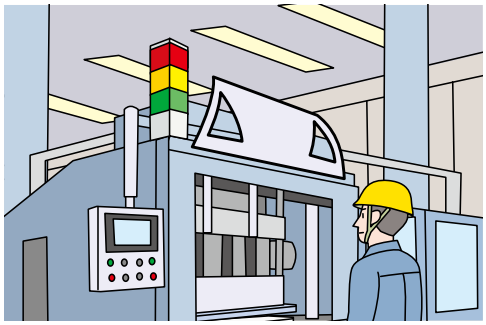

**Display Equipment Status**

Traditional information displays showed only the equipment status. There was no understanding about the equipment status provided in real time.

| | Signal Tower<br>Signal Tower | Information Signal Tower<br>LA6 |
|---|---|---|
| Colors | Maximum 5 Colors | Maximum 21 |
| Color Setting | Static | Flexible |
| Sound | 2 tones | 11 tones |

Display Process

## New Information Display

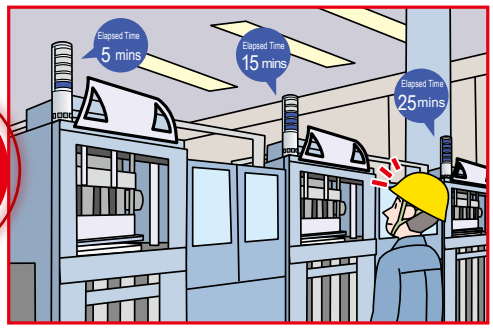

**Display elapsed time until complete**

You can visualize the progress, amount of material remaining, and so on, in real time. By recognizing the progress of processes and amount of various materials that remain, you can understand which equipment needs attention first, and reduce the stress of workers who are responsible for multiple equipment. You can also display the amount of time that has elapsed from when a problem occurred, allowing you to respond quickly.

Work Progress Time | Elapsed Time for Problem | Amount Remaining | Level | All Tiers Identification

## Model Code

# LA6-5DLJWB-RYGBC

- LED Tiers: 3: 3 tiers; 5: 5 tiers
- Rated Voltage: A: 100 - 240VAC; D: 24VDC
- Mounting / Wiring Specifications: TN: Direct mount, terminal block; LJ: Steel pole & Mounting Angle, Cable; WJ: Direct mount, Cable
- Body Color: W: Off-white; U: Silver
- Flashing / Buzzer model: B: Flashing and Buzzer available; N: No flashing/buzzer
- Color: RYG: 3 tiers; RYGBC: 5 tiers

* You can change the color of each tier after purchase.
* LJ model does not have U (Silver) setting.

### Example: LA6-5DTNUB-RYGBC

- LED Tiers:5
- Body Color:Silver
- Flashing / Buzzer model:Flashing and Buzzer available
- Mounting / Wiring Specifications:Direct Mount, Terminal Block
- Colors:Red, Amber, Green, Blue, White
- Rated Voltage:24V DC

## Dimensions (mm)

■ TN Direct mount, Terminal block model

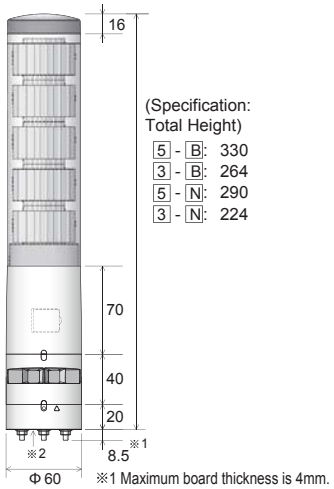


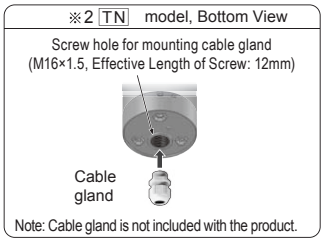


■ LJ Steel pole & Mounting Angle Cable, Specifications

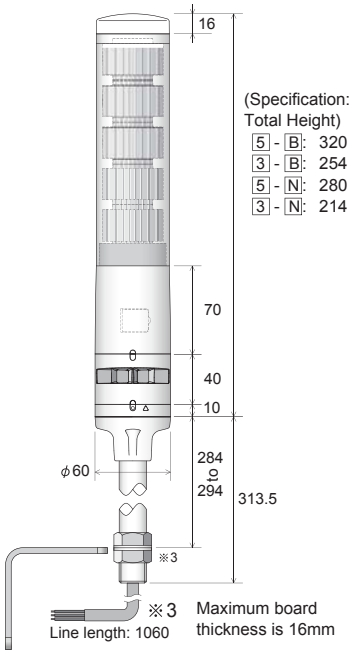


■ WJ Direct mount, Cable model
A AC 100 - 240V AC model

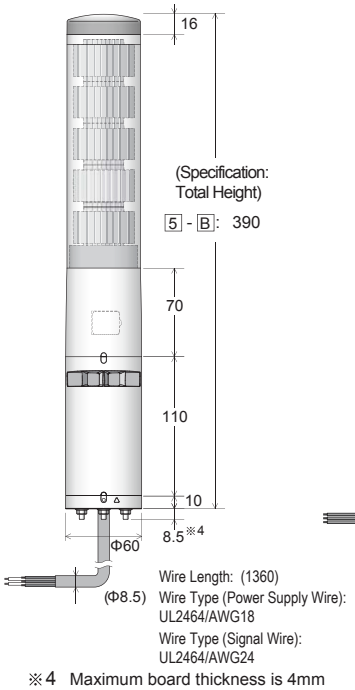


■ WJ Direct mount, with cable connection
D 24V DC Type

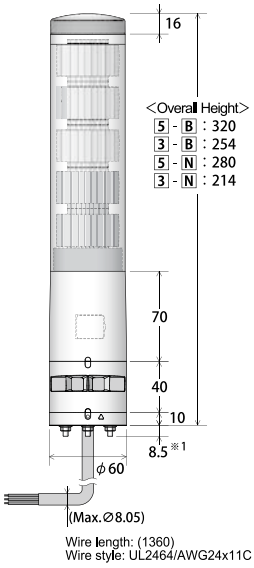


TN Direct mount, Terminal block model
WJ Direct mount, Cable model Installation Dimension Drawings

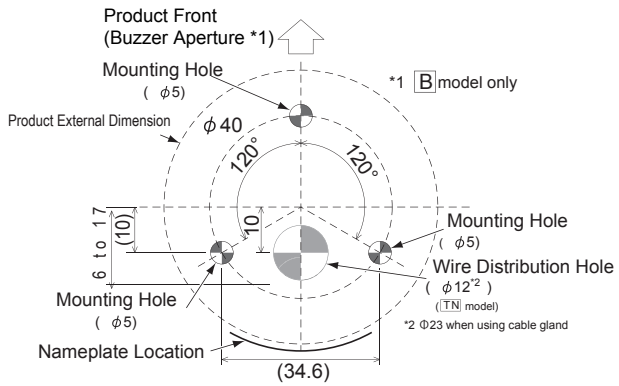


LJ The following diagram shows the dimensions of the Mounting Angle included with the Steel Pole & Mounting Angle model.

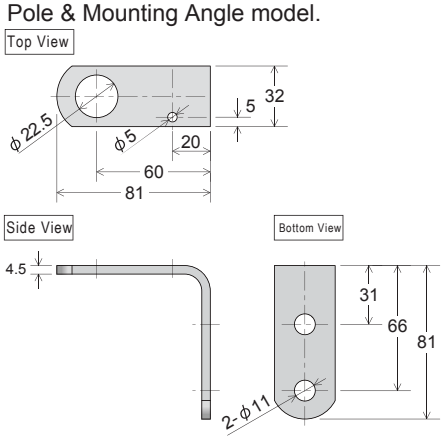

# Wiring Diagram

## 24V DC model

External Contact Classification: Contact Relay

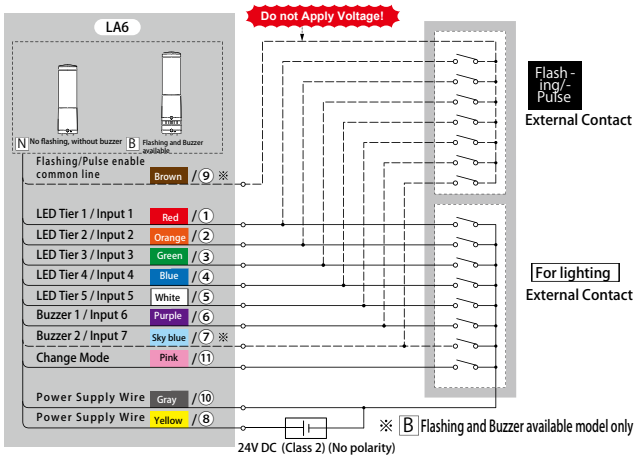


External Contact Classification: PLC (NPN transistor)

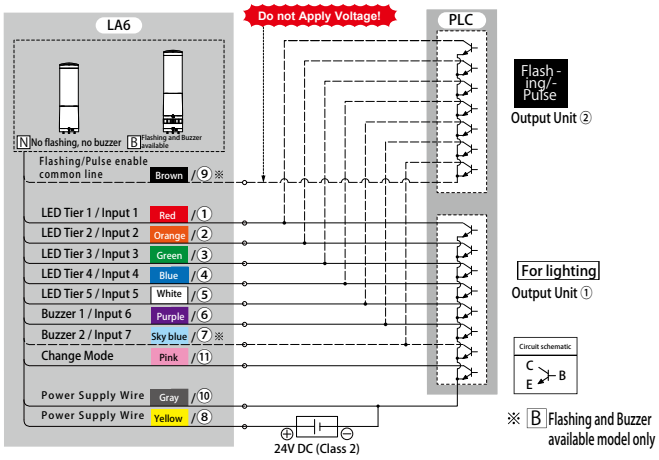


External Contact Classification: PLC (PNP transistor)

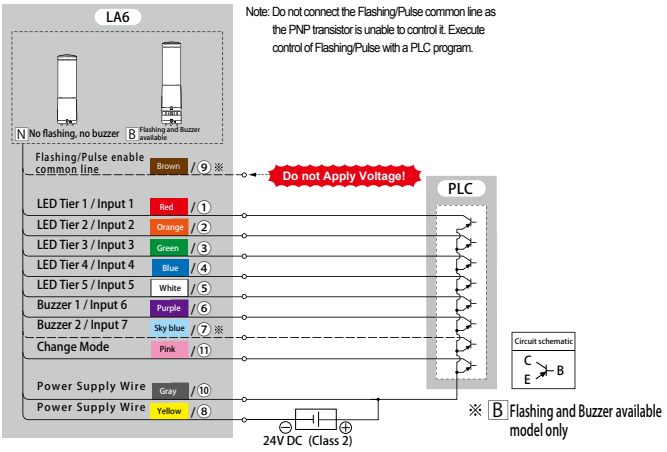


External Contact Classification: PLC or Contact Relay

⚠CAUTION If Power Supply Wire ( Gray /⑩) is not connected, inrush current will flow. Consider the capacity when selecting an External Contact.

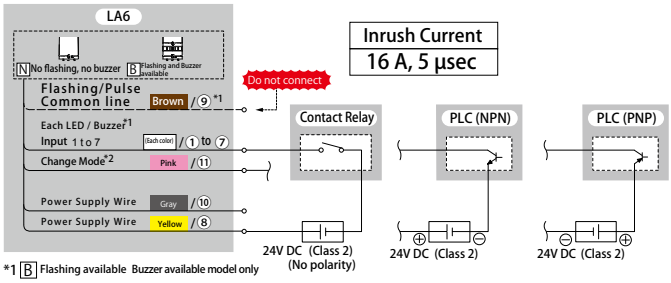


*1 B Flashing available Buzzer available model only

*2 Inrush current does not flow to the Change Mode line.

## 100 - 240V AC model

External Contact Classification: Contact Relay

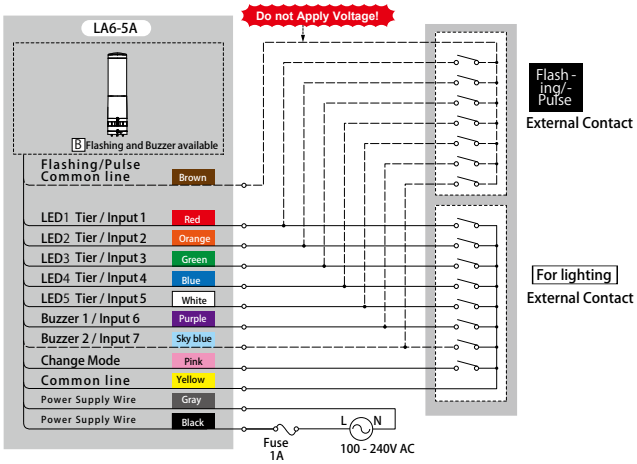


External Contact Classification: PLC (NPN transistor)

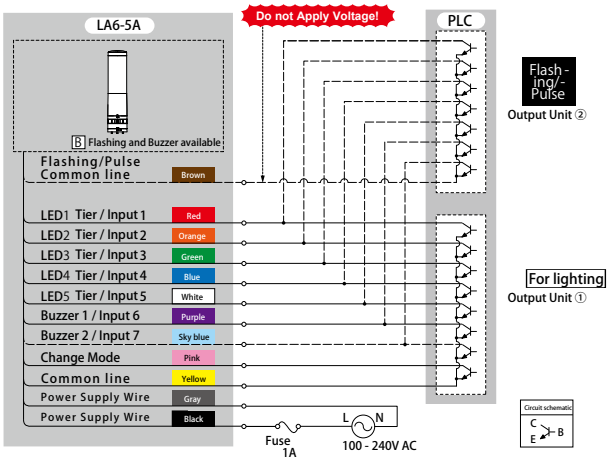


**Wiring Example / Legend**

LED Tier 1 / Input 1 — Red / ①

- Function Name [Signal Tower Mode] / [Smart Mode]
- Pin Number ( TN Direct Mount, Screw-less Terminal Block model)
- The color of wire (Cable model only)

Note: The color of the wire does not correspond to the color of the LED light.

**Rated Fuse Current**

250V / 1 A
5 x 20 mm Fast-blow glass tube fuse

**Inrush Current value (cold start)**

| | |
|---|---|
| With Ambient Operating Temperature 25℃ | 16 A, 2 ms |
| With Ambient Operating Temperature 50℃ | 50 A, 2 ms |

**NOTICE**

If you are not using a regulated power supply, use a fuse that meets or exceeds Class CC.

**Signal Wire Contact Capacity**

| | |
|---|---|
| Current Capacity | 100 mA or higher |
| Withstand Voltage | 35V DC or more |
| Leakage Current | 0.1 mA or less |
| Voltage when ON ($V_{sat}$) | 1V or less |

■ When using Smart Mode (Mode Change Pink )

| | ① Time Trigger Type | ② Pulse Trigger Type | ③ Single Display Type |
|---|---|---|---|
| Input 1 Red | Display Input ( Maximum 15 binary inputs ) | Display Input ( Maximum 15 binary inputs ) | Display Input ( Maximum 31 binary inputs ) |
| Input 2 Orange | | | |
| Input 3 Green | | | |
| Input 4 Blue | | | |
| Input 5 White | STOP | Trigger | |
| Input 6 Purple | Mute | Mute | Mute |
| Input 7 Sky blue | Clear | Clear | Clear |
| Switch Pink | At Input | | |

* For connection diagrams, please see the Instruction Manual.

# Visit our LA6 product microsite to see the LA6 Series in action.

www.patlite.com/la6

Product site

* Design of the site may change without notice.

## You can download "Editing Software" for free from the product site. Simplify creating and implementing your program.

Use the editing software to set up "luminous colors" and "illumination patterns".

1. Select from the top page.

2. Proceed to the software download page.

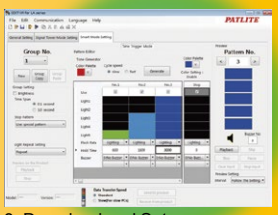

3. Download and Setup

## ■ Optional Parts

Mounting Pole: SZ-70L

Circular mounting Bracket: SZ-010

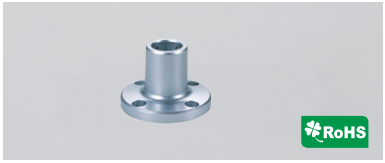

Circular mounting Bracket : SZ-016A

Wallmount Bracket: SZK-003W

Stationary installation bracket (magnetic installation): SZW-060W
Supported type: LA6-5DTNWB-POE
LA6-5AWJWB-RYGBC

## ■ Replacement Parts

**Head Cover**
Off-white B31310001-7F1
Silver B31310001-9F1

**USB Cover**
Off-white B22100071-7F1
Silver B22100071-9F1

**Waterproof Ring B (2 pieces)**
B25110042-F1

**Pole Bracket** (Off-white only)
**(Pole waterproof ring, screws included)**
B22210134-7F1
* A waterproofing ring for the pole is available.

Editing Software
Free

# Easy setup with "Editing Software".

■ **Set up operations easily**

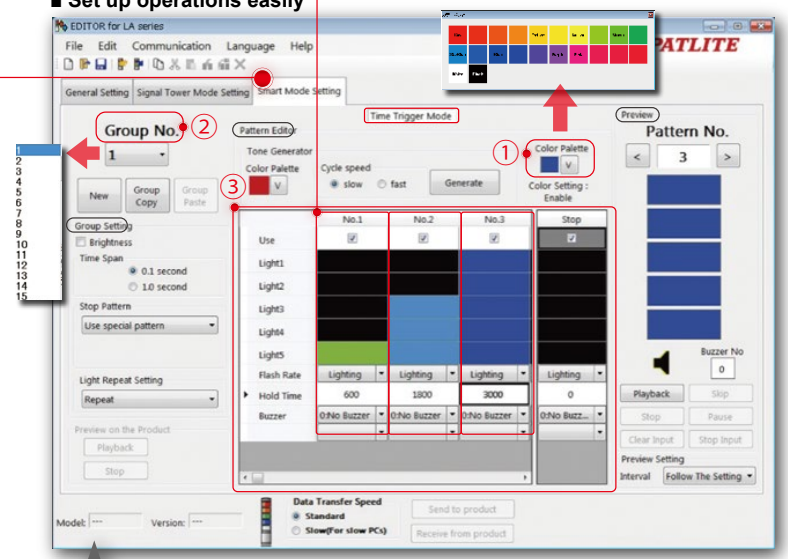


* The screen above may be different from the actual screen (displayed buttons may vary depending on usage)

① Color settings (maximum 21 colors)

Select any color from the 21 color palette.

② Group registration (maximum 15 groups*)

After setting up operations, you can register a series of operations as a group. Register a maximum 15 groups.

* You can register up to 31 groups in a Single Display Type.

③ Operation Settings (maximum 63 patterns)

Set up operations by selecting colors (21 colors), flashing frequency, illumination duration * (maximum 3,600 seconds), and buzzer sound (11 tones).

* In Signal Tower mode, you can select from 9 colors and only 3 buzzer sounds.

● Settings

- Group Settings (various detailed setup is possible)
  *Dimmer
  *Time span (0.1 / 1.0 seconds)
  *Repeating Light Setting
- Generating sign patterns (9 colors)
  *Color selection, cycle speed (slow / fast)
- Simulation
  You can verify the luminous patterns on applications without having to send data to the actual machine.
- Transmission with actual machine
  Not only can you send data to the machine, but you can also load data from the machine.

* Even when the machine is off, you can still send data with USB bus power only.

## Smart Mode 21 colors

### 1. Time Trigger Type

| | |
|---|---|
| Maximum Display Patterns | 63 Patterns |
| Maximum Number of Groups | 15 Groups |

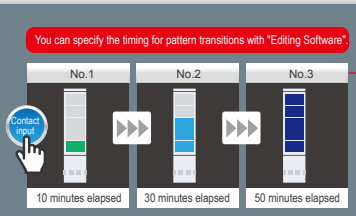


### 2. Pulse Trigger Type

| | |
|---|---|
| Maximum Display Patterns | 63 Patterns |
| Maximum Number of Groups | 15 Groups |

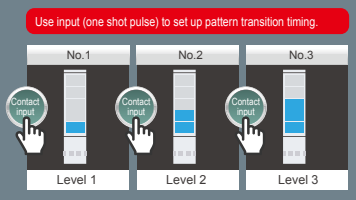


### 3. Single Display Type

| | |
|---|---|
| Maximum Display Patterns | ——— |
| Maximum Number of Groups | 31 Groups |

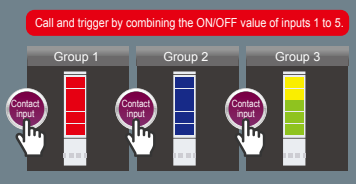


## Signal Tower Mode 9 colors

No editing software required. Set up colors using the Setting button.

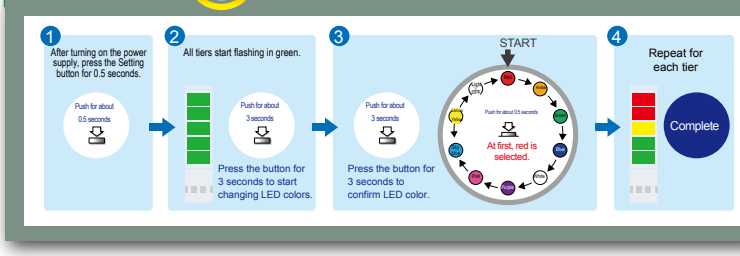

# LR

● Standard Colors:
1-Tier model / Red (-R), Amber (-Y), Green (-G)
2-Tier model / Red-Amber (-RY), Red-Green (-RG), 3-Tier model / Red-Amber-Green (-RYG)
4-Tier model / Red-Amber-Green-Blue (-RYGB), 5-Tier model / Red-Amber-Green-Blue-White (-RYGBC)

Sound pressure 90dB (Maximum) | IP65 (IP54 for LJ type only) | RoHS | UL | CE | Clear globe (LR4LR6 only) | Multi color (LR6 only) | FCC | KC | WD-Z2 Series Enabled

| | |
|---|---|
| Colors | Red, Amber, Green, Blue, White |
| Globe | Polycarbonate resin, high shock resistance and heat resistance |

Next generation signal tower series featuring ultra-bright LEDs, a modular design, and a wide-selection of options to take on the most challenging applications.

Re-designed lens and improved module construction delivering bright, even light for visibility from further distances. (2000mcd output)

Re-engineered, completely enclosed sound module, maintains substantial water and dust protection while producing loud, omni-directional sound. (LR5 DC12V: 80dB LR4 & LR5: 85dB, LR6: 88dB, LR7: 90dB at 1m)

A modular, “Twist and Lock”, design to easily customize and field configure LED units and sound modules.

A sleek, smooth form factor and a rugged body construction for performance in harsh environments, carrying an IP65 protection rating.

Four mounting options: Direct, pole with L-bracket, pole with circular bracket, and pole with folding bracket (Off-white only).

Available in DC24V and AC100-240V (Off-white only).

Available in Off-white and Silver bodies.

Available with Clear lens (special order).

## Specifications

| LR Series Assembled Products / Common Specifications | | |
|---|---|---|
| Ambient Operating Temperature | | -20℃ - +50℃ * |
| Ambient Operating Humidity | | 90% RH or less, no condensation |
| Storage Ambient Temperature | | -30℃ - +60℃ |
| Storage Ambient Humidity | | 90% RH or less, no condensation |
| Mounting location | | Indoors |
| Mounting direction | | Upright |
| Protection Rating | | IP65 (IEC 60529) / NEMA TYPE 4X, 13 * for LJ type only, IP54 |
| | Environmental Conditions | Upright |
| Insulation Resistance | | 1 MΩ or more at 500V DC between the live part and non-current carrying metallic part |
| Withstand Voltage | | 500V AC* for 1 minute, between the live part and non-current carrying metallic part. * 1500V AC for M2 type |
| Flashing Rate | | 60±2 /minute |
| Sound pressure | | LR4 Typ.85dB LR5 Typ.85dB LR6 Typ.88dB LR7 p.90dB LR5 12V DC Typ.80dB<br>With Sound Reduction: Approximately -10dB (can be switched using DIP switch) |
| | Environmental Conditions | With buzzer sound "No.4 Sweep sound", at a distance of 1 m from the surface in all directions |
| Buzzer Sound | | 4 patterns *Switch using DIP switch No.1 Fast Intermitten No.2 Continuous No.3 Fast Alternating No.4 Sweep sound<br>* By short-circuiting the buzzer line and flashing common line, you can emit a buzzer tone that turns on and off every 0.5 seconds. |
| Transistor | | NPN/PNP (*NPN only for 100 - 240V AC type) |
| Conformity standards | | ● UL 508, CSA-C22.2 No.14 ● RoHS Directive EN 50581 ● KC (KN 61000-6-4, KN 61000-6-2) *Except ABS and AS models ● EMC directives EN61000-6-4, EN61000-6-2 ● FCC Part 15 Subpart B Class A ● Low Voltage Directives IEC/EN60947-5-1, EN62471 *M2 type only (excluding LJ type) |

### External Contact Capacity

Is: Current Capacity, Vs: Withstand Voltage, IL: Leakage Current

| Rated Load Voltage | | 01 12V DC | | 02 24V DC | | M2 100 - 240V AC |
|---|---|---|---|---|---|---|
| LED Unit (per tier) | Signal Wire Current (Maximum) / Voltage | 100mA / Power supply voltage | | 45mA / Power supply voltage | | 45mA / 24V DC |
| | Recommended Contact Capacity | Is ≧ 100mA Vs ≧ DC20V (*1) | | Is ≧ 100mA Vs ≧ DC35V | | Is ≧ 100mA Vs ≧ DC35V |
| Buzzer | Signal Wire Current (Maximum) / Voltage | 250mA / Power supply voltage | | 250mA / Power supply voltage | | 250mA / 24V DC |
| | Recommended Contact Capacity | Is ≧ 300mA Vs ≧ DC20V (*1) | | Is ≧ 300mA Vs ≧ DC35V | | Is ≧ 300mA Vs ≧ DC35V |
| Power supply | Current Consumption (Maximum) | 500mA (*2) | | 250mA (*2) | | 150mA (*2) |
| | Recommended Contact Capacity | Is ≧ 700mA Vs ≧ DC20V | | Is ≧ 500mA Vs ≧ DC35V | | Inrush Current Value or more |
| Inrush Current | Signal Wire | No LED (*1) | No Buzzer (*1) | No LED | No Buzzer (*3) | None |
| | Power Supply Wire | 0.7A, 15ms or less | | None (*4) | | With Ambient Operating Temperature 25℃: 25A, 2.0ms or less (with cold start)<br>With Ambient Operating Temperature 50℃/45℃: 50A, 2.0ms or less (with cold start) (*5) |
| Transistor Contact Leakage Current | | IL ≦ 0.1 mA | | | | |

*1 When the power supply wire ( Gray / WT: 9 Black) is not connected, inrush current of 0.7 amps flow through the signal line. Recommended Contact Capacity is: Is ≧ 700mA and Vs ≧ DC20V.* 2··· 5 LED tiers and buzzer operating *3··· Signal Wire Current (maximum) or less *4··· Sum Total of Signal Wire Current (maximum) or less *5··· W Off-white (PC) model: When ambient operating temperature is 50℃

| LED Units / Common Specifications | | | | | | | |
|---|---|---|---|---|---|---|---|
| Luminous Color | | Red | Amber | Green | Blue | White | Multi color |
| Rated Voltage | | 24V DC | | | | | |
| Rated Current Consumption / Rated Power Consumption | Typ. | 0.04A/1W | | | | | |
| | Maximum | 0.045A/1.3W | | | | | |

| Audible Units / Common Specifications | | |
|---|---|---|
| Rated Voltage | | 24V DC |
| Rated Current Consumption / Rated Power Consumption | Typ. | 0.04A/1W |
| | Maximum | 0.25A/1.3W |

# LR SERIES New Lineup

## Clear-globe LED Unit

**LR4-E-RZ**

4 (ϕ 40) R (Red)
5 (ϕ 50) Y (Amber)
6 (ϕ 60) G (Green)
B (Blue)

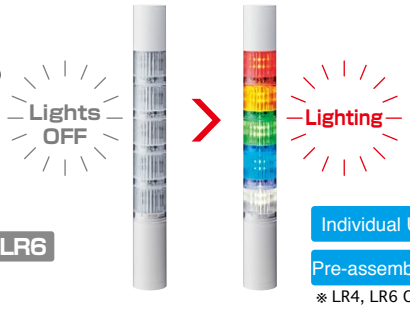


LR4 LR5 LR6
Clear globes for R,Y,G,B

Individual Unit
Pre-assembled※
※ LR4, LR6 Only

## Multi-color LED Unit

**LR6-E-MZ**

LR6

Individual Unit
It displays 7colors in one unit.
(Red/Green/Blue/Amber/
Cyan/Purple/White)

By connecting (red, green, blue) wires, the colors light up.

| Wire Color | Red | Red/ Green | Blue | Green | Blue/ Green | Red/ Blue | Red/ Green/ Blue |
|---|---|---|---|---|---|---|---|
| LED Color | Red | Amber | Blue | Green | Cyan | Purple | White |

## Direct Mount with M12 Connector

| | Model | | Tiers | Rated Voltage | Mounting/ Wiring | Buzzer | Body Color | | LED Unit Color |
|---|---|---|---|---|---|---|---|---|---|
| Assembly Model | LR | 6 | - 3 | 02 | WC | N | W | - | RYG |
| Unit Model (Body Unit) | LR | 6 | - | 02 | WC | N | W | | |

6 ϕ60
1 - 5 Tiers
02 24V DC
WC Direct Mount / M12 Connector
B Buzzer
N No Buzzer
W Off-white
LED Color: R (Red)/Y (Amber)/ G (Green)/B (Blue) /C (White) (From top to bottom)

### •Direct Mount Installation

Direct Mount

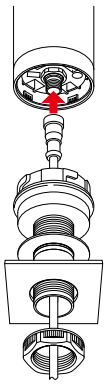

**Easy Wiring**
The M12 connection type provides a convenient, single cable mating point.

**Easy direct-mount installation**
If one hole is placed in the mounting position, it can easily be attached.
It can easily be secured with an M30 nut.

※ The M12 Connector & Cable (SZ-120) is sold separately.

### •Installation Method 2

Pole Mount

**1/2" NPT Support**
Bracket is designed to fit a 1/2 inch NPT threaded pipe.

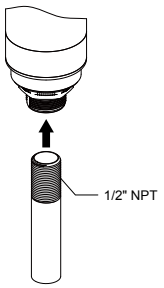


## LR5/LR7 Screwless Terminal Knock-out Mount

**Dual mount base unit allows for direct or pole mounting**

ϕ50 Body Unit　　ϕ70 Body Unit

**Screw and nut accessories included.**

| Accessory | |
|---|---|
| LR5 - KT | LR7 - KT |
| Hexagon Bolt (M3 x 20) 3 pcs. / Hexagon Nut with Flange (M3) 6 pcs. | Hexagon Bolt (M4 x 20) 3 pcs. / Hexagon Nut with Flange (M4) 6 pcs. |

### •Installation Method 1

Direct Mount (Using accessories)

Mount on pole bracket by knocking out holes with the tapping screws included with the bracket.

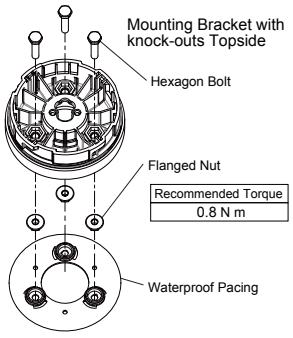


### •Installation Method 2

Pole Mount (Not Using accessories)

Mount directly by knocking out holes in the bracket and securing with nuts and bolts.

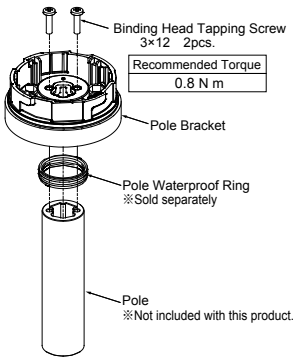


※Please refer to the Complete Operation Manual for details of installation.

## Signal Tower

# LR Series Pre-assembled Models

### ϕ40mm Model Code

(Ex.) LR4-502WJBW-RYGBCZ

Model ① ② ③ ④ ⑤ ⑥ ⑦

| ① Tiers | ② Rated Voltage | ③ Mounting/Wiring | ④ Flashing/Buzzer | ⑤ Body Color | ⑥ LED Module Color | ⑦ Globe Type |
|---|---|---|---|---|---|---|
| 1 = 1 Tier | 02 = 24V DC | WJ = Direct Mount/Cable | B = With Flashing/Buzzer | W = Off-white | R = Red | Blank = Color Globe |
| 2 = 2 Tiers | M2 = 100 - 240V AC *1 | LJ = Pole Mount with L-bracket/Cable | N = No Flashing/Buzzer | U = Silver *3 | Y = Amber | Z = Clear Globe |
| 3 = 3 Tiers | | PJ = Pole Mount with Circular Bracket/Cable | | | G = Green | |
| 4 = 4 Tiers | | QJ = Pole Mount with Folding Bracket/Cable *2 | | | B = Blue | |
| 5 = 5 Tiers | | | | | C = White | |

※1 For WJ, LJ and PJ type only ※2 For 24V DC and Off-white type only ※3 For 24V DC type WJ, LJ and PJ type only

### ϕ50mm Model Code

(Ex.) LR5-502WJBW-RYGBCZ

Model ① ② ③ ④ ⑤ ⑥ ⑦

| ① Tiers | ② Rated Voltage | ③ Mounting/Wiring | ④ Flashing/Buzzer | ⑤ Body Color | ⑥ LED Module Color | ⑦ Globe Type |
|---|---|---|---|---|---|---|
| 1 = 1 Tier | 01 = 12V DC | WJ = Direct Mount/Cable | B = With Flashing/Buzzer | W = Off-white | R = Red | Blank = Color Globe |
| 2 = 2 Tiers | 02 = 24V DC | LJ = Pole Mount with L-bracket/Cable | N = No Flashing/Buzzer | | Y = Amber | Z = Clear Globe |
| 3 = 3 Tiers | | PJ = Pole Mount with Circular Bracket/Cable | | | G = Green | |
| 4 = 4 Tiers | | | | | B = Blue | |
| 5 = 5 Tiers | | | | | C = White | |

### ϕ60mm Model Code

(Ex.) LR6-502WJBW-RYGBCZ

Model ① ② ③ ④ ⑤ ⑥ ⑦

| ① Tiers | ② Rated Voltage | ③ Mounting/Wiring | ④ Flashing/Buzzer | ⑤ Body Color | ⑥ LED Module Color | ⑦ Globe Type |
|---|---|---|---|---|---|---|
| 1 = 1 Tier | 02 = 24V DC | WJ = Direct Mount/Cable | B = With Flashing/Buzzer | W = Off-white | R = Red | Blank = Color Globe |
| 2 = 2 Tiers | M2 = 100 - 240V AC *1 | LJ = Pole Mount with L-bracket/Cable | N = No Flashing/Buzzer | U = Silver *3 | Y = Amber | Z = Clear Globe |
| 3 = 3 Tiers | | PJ = Pole Mount with Circular Bracket/Cable | | | G = Green | |
| 4 = 4 Tiers | | QJ = Pole Mount with Folding Bracket/Cable *2 | | | B = Blue | |
| 5 = 5 Tiers | | WC = Direct Mount/M12 Connector *2 | | | C = White | |
| | | | | | M = Multi Color | |

※1 For WJ, LJ and PJ type only ※2 For 24V DC and Off-white type only ※3 For 24V DC type WJ, LJ and PJ type only

### ϕ70mm Model Code

(Ex.) LR7-502WJBW-RYGBC

Model ① ② ③ ④ ⑤ ⑥

| ① Tiers | ② Rated Voltage | ③ Mounting/Wiring | ④ Flashing/Buzzer | ⑤ Body Color | ⑥ LED Module Color |
|---|---|---|---|---|---|
| 1 = 1 Tier | 02 = 24V DC | WJ = Direct Mount/Cable | B = With Flashing/Buzzer | W = Off-white | R = Red |
| 2 = 2 Tiers | | | N = No Flashing/Buzzer | | Y = Amber |
| 3 = 3 Tiers | | | | | G = Green |
| 4 = 4 Tiers | | | | | B = Blue |
| 5 = 5 Tiers | | | | | C = White |

| Mounting Type | Rated Voltage | Size | Flash/Buzzer | Tiers | Model | Power Consumption | Mass |
|---|---|---|---|---|---|---|---|
| Pole Mount with Folding Bracket | 24V DC | ϕ40 | – | 1 | LR4-102QJNW | 1.0W | 0.455kg |
| | | | | 2 | LR4-202QJNW | 2.0W | 0.490kg |
| | | | | 3 | LR4-302QJNW | 3.0W | 0.525kg |
| | | | | 4 | LR4-402QJNW | 4.0W | 0.560kg |
| | | | | 5 | LR4-502QJNW | 5.0W | 0.595kg |
| | | | O | 1 | LR4-102QJBW | 2.0W | 0.490kg |
| | | | | 2 | LR4-202QJBW | 3.0W | 0.525kg |
| | | | | 3 | LR4-302QJBW | 4.0W | 0.560kg |
| | | | | 4 | LR4-402QJBW | 5.0W | 0.595kg |
| | | | | 5 | LR4-502QJBW | 6.0W | 0.630kg |
| | | ϕ60 | – | 1 | LR6-102QJNW | 1.0W | 0.520kg |
| | | | | 2 | LR6-202QJNW | 2.0W | 0.580kg |
| | | | | 3 | LR6-302QJNW | 3.0W | 0.640kg |
| | | | | 4 | LR6-402QJNW | 4.0W | 0.700kg |
| | | | | 5 | LR6-502QJNW | 5.0W | 0.760kg |
| | | | O | 1 | LR6-102QJBW | 2.0W | 0.580kg |
| | | | | 2 | LR6-202QJBW | 3.0W | 0.640kg |
| | | | | 3 | LR6-302QJBW | 4.0W | 0.700kg |
| | | | | 4 | LR6-402QJBW | 5.0W | 0.760kg |
| | | | | 5 | LR6-502QJBW | 6.0W | 0.820kg |

| Mounting Type | Rated Voltage | Size | Flash/Buzzer | Tiers | Model | Power Consumption | Mass |
|---|---|---|---|---|---|---|---|
| Direct Mount | 12V DC | ϕ50 | – | 1 | LR5-101WJNW | 1.0W | 0.240kg |
| | | | | 2 | LR5-201WJNW | 2.0W | 0.280kg |
| | | | | 3 | LR5-301WJNW | 3.0W | 0.320kg |
| | | | | 4 | LR5-401WJNW | 4.0W | 0.360kg |
| | | | | 5 | LR5-501WJNW | 5.0W | 0.400kg |
| | | | O | 1 | LR5-101WJBW | 2.1W | 0.290kg |
| | | | | 2 | LR5-201WJBW | 3.1W | 0.330kg |
| | | | | 3 | LR5-301WJBW | 4.1W | 0.370kg |
| | | | | 4 | LR5-401WJBW | 5.1W | 0.410kg |
| | | | | 5 | LR5-501WJBW | 6.1W | 0.450kg |
| | 24V DC | ϕ40 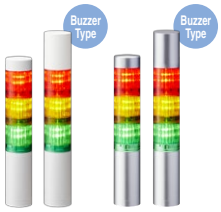  | – | 1 | LR4-102WJNW[U] | 1.0W | 0.205kg/0.355kg |
| | | | | 2 | LR4-202WJNW[U] | 2.0W | 0.240kg/0.390kg |
| | | | | 3 | LR4-402WJNW[U] | 4.0W | 0.310kg/0.460kg |
| | | | | 4 | LR4-502WJNW[U] | 5.0W | 0.345kg/0.495kg |
| | | | O | 1 | LR4-102WJBW[U] | 2.0W | 0.240kg/0.390kg |
| | | | | 2 | LR4-202WJBW[U] | 3.0W | 0.275kg/0.425kg |
| | | | | 3 | LR4-302WJBW[U] | 4.0W | 0.310kg/0.460kg |
| | | | | 4 | LR4-402WJBW[U] | 5.0W | 0.345kg/0.495kg |
| | | | | 5 | LR4-502WJBW[U] | 6.0W | 0.380kg/0.530kg |
| | | ϕ50 | – | 1 | LR5-102WJNW | 1.0W | 0.240kg |
| | | | | 2 | LR5-202WJNW | 2.0W | 0.280kg |
| | | | | 3 | LR5-302WJNW | 3.0W | 0.360kg |
| | | | | 4 | LR5-402WJNW | 4.0W | 0.360kg |
| | | | | 5 | LR5-502WJNW | 5.0W | 0.400kg |
| | | | O | 1 | LR5-102WJBW | 2.0W | 0.290kg |
| | | | | 2 | LR5-202WJBW | 3.0W | 0.330kg |
| | | | | 3 | LR5-302WJBW | 4.0W | 0.370kg |
| | | | | 4 | LR5-402WJBW | 5.0W | 0.410kg |
| | | | | 5 | LR5-502WJBW | 6.0W | 0.450kg |
| | | ϕ60 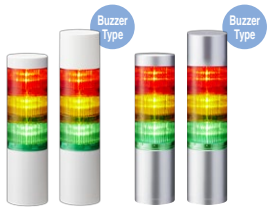  | – | 1 | LR6-102WJNW[U] | 1.0W | 0.280kg/0.410kg |
| | | | | 2 | LR6-202WJNW[U] | 2.0W | 0.340kg/0.470kg |
| | | | | 3 | LR6-302WJNW[U] | 3.0W | 0.400kg/0.530kg |
| | | | | 4 | LR6-402WJNW[U] | 4.0W | 0.460kg/0.590kg |
| | | | | 5 | LR6-502WJNW[U] | 5.0W | 0.520kg/0.650kg |
| | | | O | 1 | LR6-102WJBW[U] | 2.0W | 0.340kg/0.470kg |
| | | | | 2 | LR6-202WJBW[U] | 3.0W | 0.400kg/0.530kg |
| | | | | 3 | LR6-302WJBW[U] | 4.0W | 0.460kg/0.590kg |
| | | | | 4 | LR6-402WJBW[U] | 5.0W | 0.520kg/0.650kg |
| | | | | 5 | LR6-502WJBW[U] | 6.0W | 0.580kg/0.710kg |
| | | ϕ70 | – | 1 | LR7-102WJNW | 1.0W | 0.305kg |
| | | | | 2 | LR7-202WJNW | 2.0W | 0.370kg |
| | | | | 3 | LR7-302WJNW | 3.0W | 0.435kg |
| | | | | 4 | LR7-402WJNW | 4.0W | 0.500kg |
| | | | | 5 | LR7-502WJNW | 5.0W | 0.565kg |
| | | | O | 1 | LR7-102WJBW | 2.0W | 0.375kg |
| | | | | 2 | LR7-202WJBW | 3.0W | 0.440kg |
| | | | | 3 | LR7-302WJBW | 4.0W | 0.505kg |
| | | | | 4 | LR7-402WJBW | 5.0W | 0.570kg |
| | | | | 5 | LR7-502WJBW | 6.0W | 0.635kg |
| | 100 - 240V AC | ϕ40 | – | 1 | LR4-1M2WJNW | 1.5W | 0.285kg |
| | | | | 2 | LR4-2M2WJNW | 3.0W | 0.320kg |
| | | | | 3 | LR4-3M2WJNW | 4.5W | 0.355kg |
| | | | | 4 | LR4-4M2WJNW | 6.0W | 0.390kg |
| | | | | 5 | LR4-5M2WJNW | 7.5W | 0.425kg |
| | | | O | 1 | LR4-1M2WJBW | 3.0W | 0.320kg |
| | | | | 2 | LR4-2M2WJBW | 4.5W | 0.355kg |
| | | | | 3 | LR4-3M2WJBW | 6.0W | 0.390kg |
| | | | | 4 | LR4-4M2WJBW | 7.5W | 0.425kg |
| | | | | 5 | LR4-5M2WJBW | 9.0W | 0.460kg |
| | | ϕ60 | – | 1 | LR6-1M2WJNW | 1.5W | 0.380kg |
| | | | | 2 | LR6-2M2WJNW | 3.0W | 0.440kg |
| | | | | 3 | LR6-3M2WJNW | 4.5W | 0.500kg |
| | | | | 4 | LR6-4M2WJNW | 6.0W | 0.560kg |
| | | | | 5 | LR6-5M2WJNW | 7.5W | 0.620kg |
| | | | O | 1 | LR6-1M2WJBW | 3.0W | 0.440kg |
| | | | | 2 | LR6-2M2WJBW | 4.5W | 0.500kg |
| | | | | 3 | LR6-3M2WJBW | 6.0W | 0.560kg |
| | | | | 4 | LR6-4M2WJBW | 7.5W | 0.620kg |
| | | | | 5 | LR6-5M2WJBW | 9.0W | 0.680kg |

## Signal Tower

# LR Series Pre-assembled Models

| Mounting Type | Rated Voltage | Size | Flash/Buzzer | Tiers | Model | Power Consumption | Mass |
|---|---|---|---|---|---|---|---|
| Pole Mount with Circular Bracket | 12V DC | ϕ50 | – | 1 | LR5-101PJNW | 1.0W | 0.420kg |
| | | | | 2 | LR5-201PJNW | 2.0W | 0.460kg |
| | | | | 3 | LR5-301PJNW | 3.0W | 0.500kg |
| | | | | 4 | LR5-401PJNW | 4.0W | 0.540kg |
| | | | | 5 | LR5-501PJNW | 5.0W | 0.580kg |
| | | | O | 1 | LR5-101PJBW | 2.1W | 0.470kg |
| | | | | 2 | LR5-201PJBW | 3.1W | 0.510kg |
| | | | | 3 | LR5-301PJBW | 4.4W | 0.550kg |
| | | | | 4 | LR5-401PJBW | 5.1W | 0.590kg |
| | | | | 5 | LR5-501PJBW | 6.1W | 0.630kg |
| | 24V DC | ϕ40 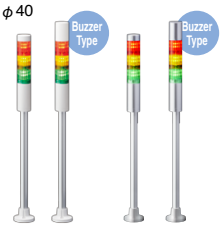 | – | 1 | LR4-102PJNW[U] | 1.0W | 0.395kg/0.545kg |
| | | | | 2 | LR4-202PJNW[U] | 2.0W | 0.430kg/0.580kg |
| | | | | 3 | LR4-302PJNW[U] | 3.0W | 0.465kg/0.615kg |
| | | | | 4 | LR4-402PJNW[U] | 4.0W | 0.500kg/0.650kg |
| | | | | 5 | LR4-502PJNW[U] | 5.0W | 0.535kg/0.685kg |
| | | | O | 1 | LR4-102PJBW[U] | 2.0W | 0.430kg/0.580kg |
| | | | | 2 | LR4-202PJBW[U] | 3.0W | 0.465kg/0.615kg |
| | | | | 3 | LR4-302PJBW[U] | 4.0W | 0.500kg/0.650kg |
| | | | | 4 | LR4-402PJBW[U] | 5.0W | 0.535kg/0.685kg |
| | | | | 5 | LR4-502PJBW[U] | 6.0W | 0.570kg/0.720kg |
| | | ϕ50 | – | 1 | LR5-102PJNW | 1.0W | 0.420kg |
| | | | | 2 | LR5-202PJNW | 2.0W | 0.460kg |
| | | | | 3 | LR5-302PJNW | 3.0W | 0.500kg |
| | | | | 4 | LR5-402PJNW | 4.0W | 0.540kg |
| | | | | 5 | LR5-502PJNW | 5.0W | 0.580kg |
| | | | O | 1 | LR5-102PJBW | 2.0W | 0.470kg |
| | | | | 2 | LR5-202PJBW | 3.0W | 0.510kg |
| | | | | 3 | LR5-302PJBW | 4.0W | 0.550kg |
| | | | | 4 | LR5-402PJBW | 5.0W | 0.590kg |
| | | | | 5 | LR5-502PJBW | 6.0W | 0.630kg |
| | | ϕ60 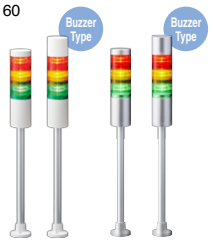 | – | 1 | LR6-102PJNW[U] | 1.0W | 0.460kg/0.590kg |
| | | | | 2 | LR6-202PJNW[U] | 2.0W | 0.520kg/0.650kg |
| | | | | 3 | LR6-302PJNW[U] | 3.0W | 0.580kg/0.710kg |
| | | | | 4 | LR6-402PJNW[U] | 4.0W | 0.640kg/0.770kg |
| | | | | 5 | LR6-502PJNW[U] | 5.0W | 0.700kg/0.830kg |
| | | | O | 1 | LR6-102PJBW[U] | 2.0W | 0.520kg/0.650kg |
| | | | | 2 | LR6-202PJBW[U] | 3.0W | 0.580kg/0.710kg |
| | | | | 3 | LR6-302PJBW[U] | 4.0W | 0.640kg/0.770kg |
| | | | | 4 | LR6-402PJBW[U] | 5.0W | 0.700kg/0.830kg |
| | | | | 5 | LR6-502PJBW[U] | 6.0W | 0.760kg/0.890kg |
| | 100 - 240V AC | ϕ40 | – | 1 | LR4-1M2PJNW | 1.5W | 0.475kg |
| | | | | 2 | LR4-2M2PJNW | 3.0W | 0.510kg |
| | | | | 3 | LR4-3M2PJNW | 4.5W | 0.545kg |
| | | | | 4 | LR4-4M2PJNW | 6.0W | 0.580kg |
| | | | | 5 | LR4-5M2PJNW | 7.5W | 0.615kg |
| | | | O | 1 | LR4-1M2PJBW | 3.0W | 0.510kg |
| | | | | 2 | LR4-2M2PJBW | 4.5W | 0.545kg |
| | | | | 3 | LR4-3M2PJBW | 6.0W | 0.580kg |
| | | | | 4 | LR4-4M2PJBW | 7.5W | 0.615kg |
| | | | | 5 | LR4-5M2PJBW | 9.0W | 0.650kg |
| | | ϕ60 | – | 1 | LR6-1M2PJNW | 1.5W | 0.560kg |
| | | | | 2 | LR6-2M2PJNW | 3.0W | 0.620kg |
| | | | | 3 | LR6-3M2PJNW | 4.5W | 0.680kg |
| | | | | 4 | LR6-4M2PJNW | 6.0W | 0.740kg |
| | | | | 5 | LR6-5M2PJNW | 7.5W | 0.800kg |
| | | | O | 1 | LR6-1M2PJBW | 3.0W | 0.620kg |
| | | | | 2 | LR6-2M2PJBW | 4.5W | 0.680kg |
| | | | | 3 | LR6-3M2PJBW | 6.0W | 0.740kg |
| | | | | 4 | LR6-4M2PJBW | 7.5W | 0.800kg |
| | | | | 5 | LR6-5M2PJBW | 9.0W | 0.860kg |

| Mounting Type | Rated Voltage | Size | Flash/Buzzer | Tiers | Model | Power Consumption | Mass |
|---|---|---|---|---|---|---|---|
| Pole Mount with L-bracket | 12V DC | ϕ50 | – | 1 | LR5-101LJNW | 1.0W | 0.530kg |
| | | | | 2 | LR5-201LJNW | 2.0W | 0.570kg |
| | | | | 3 | LR5-301LJNW | 3.0W | 0.610kg |
| | | | | 4 | LR5-401LJNW | 4.0W | 0.650kg |
| | | | | 5 | LR5-501LJNW | 5.0W | 0.690kg |
| | | | O | 1 | LR5-101LJBW | 2.1W | 0.580kg |
| | | | | 2 | LR5-201LJBW | 3.1W | 0.620kg |
| | | | | 3 | LR5-301LJBW | 4.1W | 0.660kg |
| | | | | 4 | LR5-401LJBW | 5.1W | 0.700kg |
| | | | | 5 | LR5-501LJBW | 6.1W | 0.740kg |
| | 24V DC | ϕ40 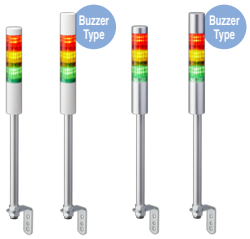  | – | 1 | LR4-102LJNW[U] | 1.0W | 0.495kg/0.645kg |
| | | | | 2 | LR4-202LJNW[U] | 2.0W | 0.530kg/0.680kg |
| | | | | 3 | LR4-302LJNW[U] | 3.0W | 0.565kg/0.715kg |
| | | | | 4 | LR4-402LJNW[U] | 4.0W | 0.600kg/0.750kg |
| | | | | 5 | LR4-502LJNW[U] | 5.0W | 0.635kg/0.785kg |
| | | | O | 1 | LR4-102LJBW[U] | 2.0W | 0.530kg/0.680kg |
| | | | | 2 | LR4-202LJBW[U] | 3.0W | 0.565kg/0.715kg |
| | | | | 3 | LR4-302LJBW[U] | 4.0W | 0.600kg/0.750kg |
| | | | | 4 | LR4-402LJBW[U] | 5.0W | 0.635kg/0.785kg |
| | | | | 5 | LR4-502LJBW[U] | 6.0W | 0.670kg/0.820kg |
| | | ϕ50 | – | 1 | LR5-102LJNW | 1.0W | 0.530kg |
| | | | | 2 | LR5-202LJNW | 2.0W | 0.570kg |
| | | | | 3 | LR5-302LJNW | 3.0W | 0.610kg |
| | | | | 4 | LR5-402LJNW | 4.0W | 0.650kg |
| | | | | 5 | LR5-502LJNW | 5.0W | 0.690kg |
| | | | O | 1 | LR5-102LJBW | 2.0W | 0.580kg |
| | | | | 2 | LR5-202LJBW | 3.0W | 0.620kg |
| | | | | 3 | LR5-302LJBW | 4.0W | 0.660kg |
| | | | | 4 | LR5-402LJBW | 5.0W | 0.700kg |
| | | | | 5 | LR5-502LJBW | 6.0W | 0.740kg |
| | | ϕ60 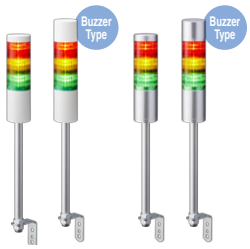  | – | 1 | LR6-102LJNW[U] | 1.0W | 0.560kg/0.700kg |
| | | | | 2 | LR6-202LJNW[U] | 2.0W | 0.620kg/0.760kg |
| | | | | 3 | LR6-302LJNW[U] | 3.0W | 0.680kg/0.820kg |
| | | | | 4 | LR6-402LJNW[U] | 4.0W | 0.740kg/0.880kg |
| | | | | 5 | LR6-502LJNW[U] | 5.0W | 0.800kg/0.940kg |
| | | | O | 1 | LR6-102LJBW[U] | 2.0W | 0.620kg/0.760kg |
| | | | | 2 | LR6-202LJBW[U] | 3.0W | 0.680kg/0.820kg |
| | | | | 3 | LR6-302LJBW[U] | 4.0W | 0.740kg/0.880kg |
| | | | | 4 | LR6-402LJBW[U] | 5.0W | 0.800kg/0.940kg |
| | | | | 5 | LR6-502LJBW[U] | 6.0W | 0.860kg/1.000kg |
| | 100-240V AC※ | ϕ40 | – | 1 | LR4-1M2LJNW | 1.5W | 0.575kg |
| | | | | 2 | LR4-2M2LJNW | 3.0W | 0.610kg |
| | | | | 3 | LR4-3M2LJNW | 4.5W | 0.645kg |
| | | | | 4 | LR4-4M2LJNW | 6.0W | 0.680kg |
| | | | | 5 | LR4-5M2LJNW | 7.5W | 0.715kg |
| | | | O | 1 | LR4-1M2LJBW | 3.0W | 0.610kg |
| | | | | 2 | LR4-2M2LJBW | 4.5W | 0.645kg |
| | | | | 3 | LR4-3M2LJBW | 6.0W | 0.680kg |
| | | | | 4 | LR4-4M2LJBW | 7.5W | 0.715kg |
| | | | | 5 | LR4-5M2LJBW | 9.0W | 0.750kg |
| | | ϕ60 | – | 1 | LR6-1M2LJNW | 1.5W | 0.660kg |
| | | | | 2 | LR6-2M2LJNW | 3.0W | 0.720kg |
| | | | | 3 | LR6-3M2LJNW | 4.5W | 0.780kg |
| | | | | 4 | LR6-4M2LJNW | 6.0W | 0.840kg |
| | | | | 5 | LR6-5M2LJNW | 7.5W | 0.900kg |
| | | | O | 1 | LR6-1M2LJBW | 3.0W | 0.720kg |
| | | | | 2 | LR6-2M2LJBW | 4.5W | 0.780kg |
| | | | | 3 | LR6-3M2LJBW | 6.0W | 0.840kg |
| | | | | 4 | LR6-4M2LJBW | 7.5W | 0.900kg |
| | | | | 5 | LR6-5M2LJBW | 9.0W | 0.960kg |
| Direct Mount With M12 Connector | 24V DC | ϕ60 | – | 3 | LR6-302WCNW | 3.0W | 0.350kg |

※ Not suitable for KC (KN 61000-6-4, KN 61000-6-2) and Low Voltage Directive (TEC / EN 60947-5-1, EN 62471).

Signal Tower

# LR Series Modular Models



## Select a Audible Alarm Unit (for Flashing / Audible Alarm function)

| Size | Color | Model |
|---|---|---|
| ϕ40 | | LR4-B□ |
| ϕ50 | | LR5-B□ |
| ϕ60 | | LR6-B□ |
| ϕ70 | | LR7-B□ |

□•••W: Off-white U: Silver K: Black

## Select an LED Unit

| Size | Color | Model |
|---|---|---|
| ϕ40 | | LR4-E-R/Y/G/B/C<br>LR4-E-RZ/YZ/GZ/BZ CLEAR |
| ϕ50 | | LR5-E-R/Y/G/B/C<br>LR4-E-RZ/YZ/GZ/BZ CLEAR |
| ϕ60 | | LR6-E-R/Y/G/B/C<br>LR6-E-RZ/YZ/GZ/BZ CLEAR |
| ϕ70 | | LR7-E-R/Y/G/B/C |
| ϕ60 | | LR6-E-MZ Multi-color |

## Select a Body Unit

| Mounting Type | Rated Voltage | Size | Model |
|---|---|---|---|
| Direct Mount/Cable | 12V DC | ϕ50 | LR5-01WJNW |
| | 24V DC | ϕ40 | LR4-02WJNW[U] |
| | | ϕ50 | LR5-02WJNW |
| | | ϕ60 | LR6-02WJNW[U] |
| | | ϕ70 | LR7-02WJNW |
| | 100 - 240V AC | ϕ40 | LR4-M2WJNW |
| | | ϕ60 | LR6-M2WJNW |
| Direct Mount/ Screwless Terminal | 24V DC | ϕ50 | LR5-02WTNW[U][K] |
| | | ϕ70 | LR7-02WTNW[U][K] |
| Knock-out Mount/ Screwless Terminal | 24V DC | ϕ50 | LR5-02KTNW[U][K] |
| | | ϕ70 | LR7-02KTNW[U][K] |
| Direct Mount/ M12 Connector | 24V DC | ϕ60 | LR6-02WCNW |

## Body Unit Model Code

(Ex.) **LR6-02WJNW**

Model ① ② ③ ④ ⑤

① Size
4 = ϕ40
5 = ϕ50
6 = ϕ60
7 = ϕ70

② Rated Voltage
01 = 12V DC※1
02 = 24V DC
M2 = 100 - 240V AC※2

③ Mounting/Wiring
WJ = Direct Mount/Cable
WT = Direct Mount/Terminal※3
KT = Knock-outs Mount/Terminal※3
WC = Direct Mount/M12 Connector※4
LJ = Pole Mount with L-bracket/Cable※5
PJ = Pole Mount with Circular Bracket/Cable※5
QJ = Pole Mount with Folding Bracket/Cable※6

④ Flashing/Buzzer
N = No Flashing/Buzzer

⑤ Body Color
W = Off-white
U = Silver
K = Black※7

※1 For LR5 models only
※2 For WJ, LJ and PJ mounting with LR4 and LR6 models
※3 For LR5, LR7 DC24V models only
※4 For LR6 DC24V models only
※5 For LR4, LR5 and LR6 models
※6 With LR4 and LR6 DC24V Off-white models only
※7 For LR5, LR7 models only

## 3 Easy Steps

**1** Remove the headcover to setup the body unit

**2** Attach from bottom to top, one LED unit at a time to the body unit

**3** Replace the headcover, or attach the audible unit

### See the Movie!!

Scan the QR code to see how easy the LR is to configure.

12V DC | 24V DC | 100-240V AC | Cable | Terminal

| Mounting Type | Rated Voltage | Size | Model |
|---|---|---|---|
| Pole Mount with Circular Bracket/Cable | 12V DC | ϕ50 | **LR5-01PJNW** |
| | 24V DC | ϕ40 | **LR4-02PJNW[U]** |
| | | ϕ50 | **LR5-02PJNW** |
| | | ϕ60 | **LR6-02PJNW[U]** |
| | 100 - 240V AC | ϕ40 | **LR4-M2PJNW** |
| | | ϕ60 | **LR6-M2PJNW** |
| Pole Mount with L-bracket/Cable | 12V DC | ϕ50 | **LR5-01LJNW** |
| | 24V DC | ϕ40 | **LR4-02LJNW[U]** |
| | | ϕ50 | **LR5-02LJNW** |
| | | ϕ60 | **LR6-02LJNW[U]** |
| | 100 - 240V AC | ϕ40 | **LR4-M2LJNW** |
| | | ϕ60 | **LR6-M2LJNW** |
| Pole Mount with Folding Bracket/Cable | 24V DC | ϕ40 | **LR4-02QJNW** |
| | | ϕ60 | **LR6-02QJNW** |

**Removable Screwless Terminal**

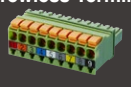

A new removable terminal for easier wiring.

# Outer Dimensional Drawing (Unit: mm)

## Mount A [WJ] Direct Mount/Cable (01: 12V DC / 02: 24V DC) (M2: 100-240V AC)

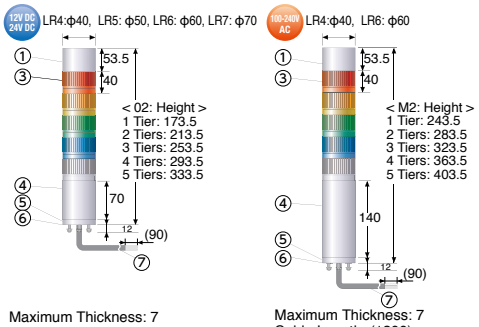


Maximum Thickness: 7
Cable Length: (1300)
U type: (3300)
Cable Diameter: ϕ7.5

Maximum Thickness: 7
Cable Length: (1300)
U type: (3300)
Cable Diameter: ϕ7.5

| No. | Description | Material |
|---|---|---|
| ① | Buzzer Unit | PC |
| ② | Head Cover | PC |
| ③ | LED Unit | Globe: PC |
| ④ | Body | PC |
| ⑤ | Direct Mount Bracket | PC |
| ⑥ | Waterproof Packing | Silicon Rubber |
| ⑦ | Cable | PVC |

## Mount A [WT] Direct Mount/ Screwless Terminal (Body Unit)

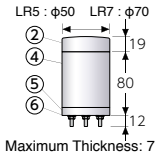


Maximum Thickness: 7

## Mount B [LJ] Pole Mount with L-bracket & Cable (01: 12V DC / 02: 24V DC) (M2: 100-240V AC)

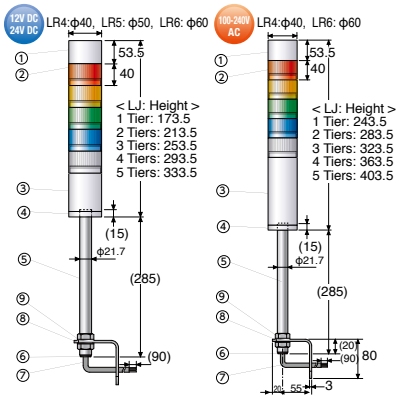


Cable Length: (1000)
U type: (3000)
Cable Diameter: ϕ7.5

Cable Length: (1000)
U type: (3000)
Cable Diameter: ϕ7.5

| No. | Description | Material |
|---|---|---|
| ① | Buzzer Unit | PC |
| ② | LED Unit | Globe: PC |
| ③ | Body | PC |
| ④ | Pole Bracket | PC |
| ⑤ | Pole | AL |
| ⑥ | Rubber Bushing | EPR Rubber |
| ⑦ | Cable | PVC |
| ⑧ | L-bracket | Steel |
| ⑨ | Hexagon Nut M22 | SUM |

## Mount A [PJ] Pole Mount with/Circular Bracket & Cable (01: 12V DC / 02: 24V DC) (M2: 100-240V AC)

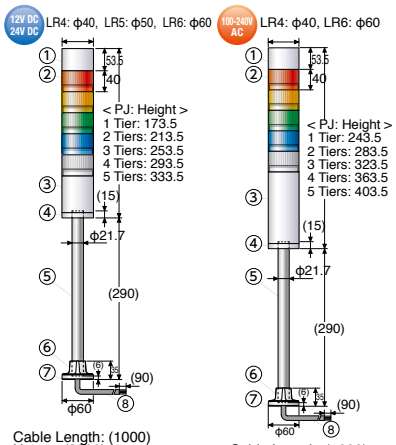


Cable Length: (1000)
U type: (3000)
Cable Diameter: ϕ7.5

Cable Length: (1000)
Cable Diameter: ϕ7.5

| No. | Description | Material |
|---|---|---|
| ① | Buzzer Unit | PC |
| ② | LED Unit | Globe: PC |
| ③ | Body | PC |
| ④ | Pole Bracket | PC |
| ⑤ | Pole | AL |
| ⑥ | Circular Bracket | PC |
| ⑦ | Waterproof Packing | Silicon Rubber |
| ⑧ | Cable | PVC |

## Mount C [QJ] Pole Mount with/Folding Bracket & Cable (02: 24V DC)

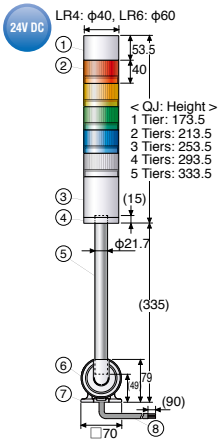


Cable Length: (950)
Cable Diameter: ϕ7.5

| No. | Description | Material |
|---|---|---|
| ① | Buzzer Unit | PC |
| ② | LED Unit | Globe: PC |
| ③ | Body | PC |
| ④ | Pole Bracket | PC |
| ⑤ | Pole | AL |
| ⑥ | Folding Bracket | PC |
| ⑦ | Waterproof Packing | CR |
| ⑧ | Cable | PVC |

## Mount D [WC] Direct Mount with M12 Connector (02: 24V DC)

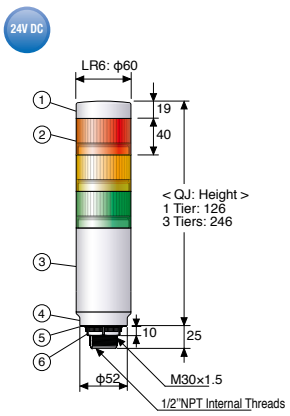


Maximum Board Thickness : 10

| No. | Description | Material |
|---|---|---|
| ① | Head Cover | PC |
| ② | LED Unit | Globe: PC |
| ③ | Body | PC |
| ④ | Direct Mount Bracket | PC |
| ⑤ | Waterproof Packing (t=1) | Silicone Rubber |
| ⑥ | M30 Nut | PC |

# Mounting Dimensions (Unit: mm)

## Mount A Mounting Diagram [WJ] / [PJ] / [WT] / [KT]

| Mounting Holes x3 | | Nut/ Screw |
|---|---|---|
| LR4/5-WJ | ϕ4 | M3 |
| LR5-WT/KT* | | |
| LR4/5/6-PJ | ϕ5 | M4 |
| LR6/7-WJ | | |
| LR7-WT/KT* | | |

(*) KT Direct Mount when using accessory

| | |
|---|---|
| LR4/5-WJ | ϕ30 |
| LR5-WT/KT* | |
| LR4/5/6-PJ | ϕ40 |
| LR6/7-WJ | |
| LR7-WT/KT* | |

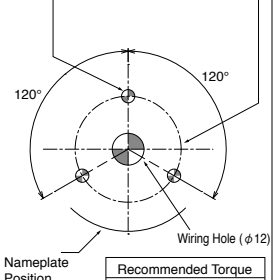


Recommended Torque
0.6 N/m

## Mount B Mounting Diagram [LJ]

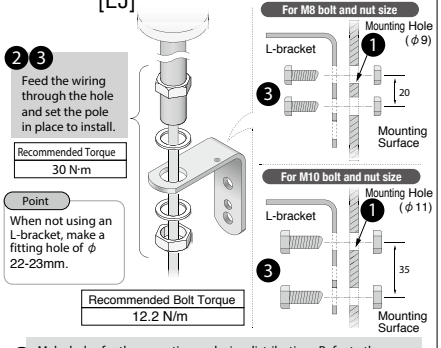


1 Make holes for the mounting and wire-distribution. Refer to the suitable attachment or mounting dimension figure for the model. (Select among the two mounting options for the KT model.

2 Run wiring through the mounting hole.

3 Secure the product with the bolts, nuts and screws. Required nuts and bolts for LJ are not included.

## Mount C Mounting Diagram [QJ]

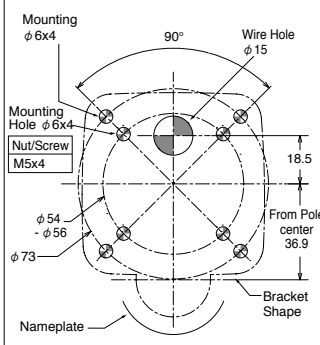


Recommended Torque
1.4 N/m

## Mount D Mounting Dimensional Drawing

(M30×1.5 Installation)

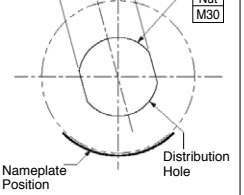


(Unit: mm))

Recommended Torque
4.5 N/m

# Wiring Diagrams

■**Wire Type & Wire Gauge**
Wire Type·····UL2464
Wire Gauge···[01] 12V DC [02] 24V DC
Signal Wire : AWG24
Power Supply Wire : AWG24

Wiring Example Index

LED Red — RED / ①
Function Name — Lead Wire Color (Cable type)
<Note> The lead wire color does not indicate the LED illuminescence Color.
PIN No. WT Direct Mount with Terminal Brock, KT Mounting Bracket with knock-outs Terminal Brock
Refer to pg. 16 "**Terminal Block Array**"

## Product Specifications 01 12V DC 02 24V DC

### External Contact Classification — Voltage Contact Relay

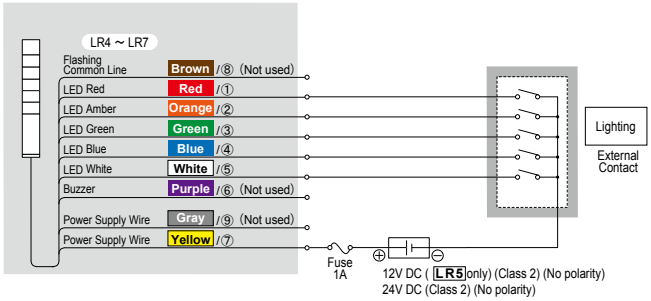


### External Contact Classification — PLC (NPN Transistor)

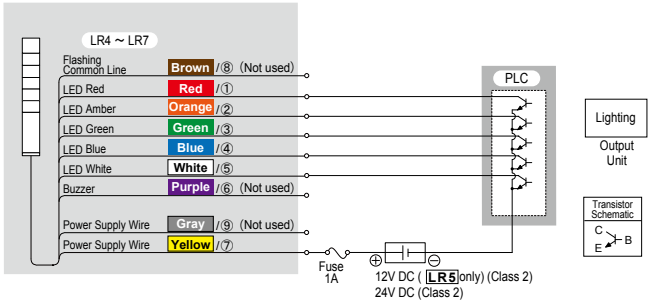


### External Contact Classification — PLC (PNP Transistor)

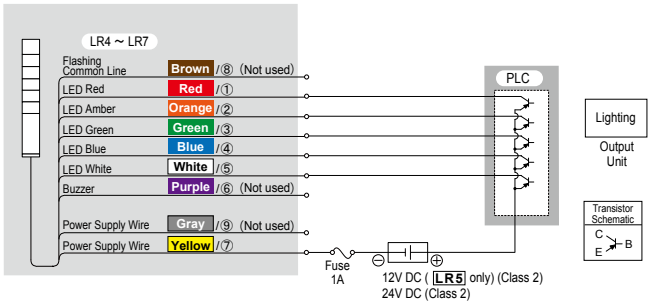


## Product Specifications 01 12V DC 02 24V DC

### External Contact Classification — Voltage Contact Relay

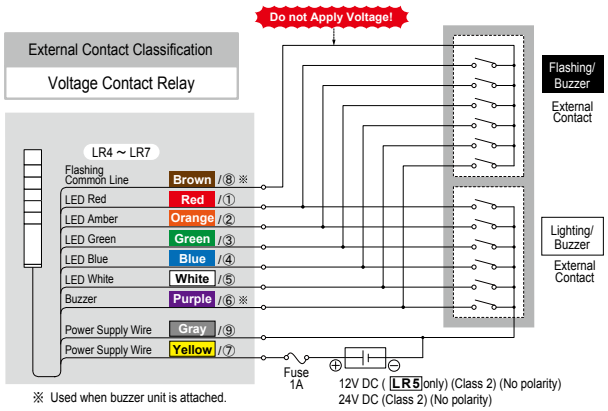


### External Contact Classification — PLC (NPN Transistor)

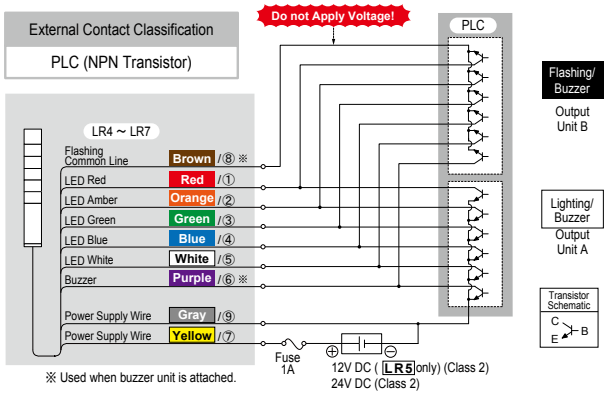


### External Contact Classification — PLC (PNP Transistor)

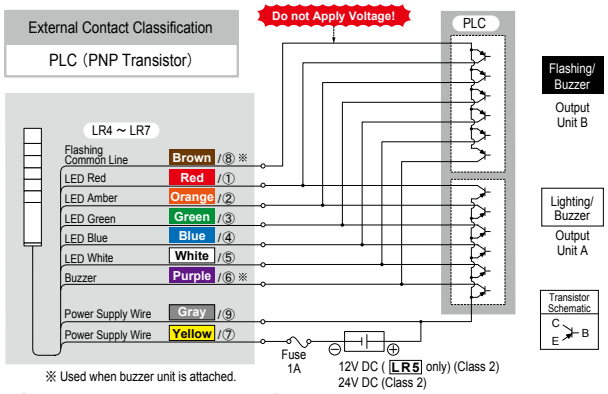


《LR Series 2-Buzzer Operation Method》
Connecting the Buzzer wire (Purple) with the Flashing Common wire (Brown) will control the selection of two different buzzer sounds.

## Product Specifications M2 100 - 240V AC

### External Contact Classification — Voltage Contact Relay

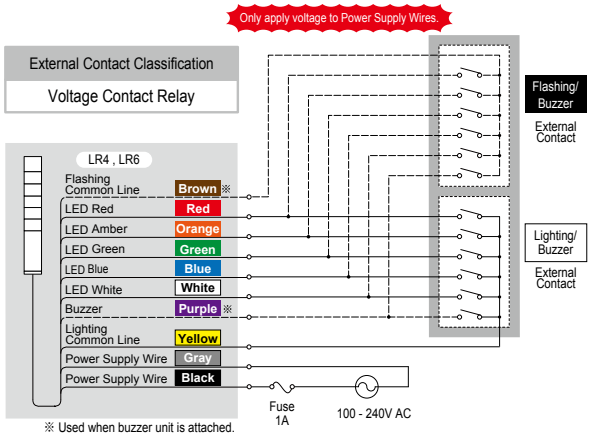


■**Wire Type & Wire Gauge**
Wire Type·····UL2464
Wire Gauge···[M2] 100-240V AC
Signal Wire : AWG24
Power Supply Wire : AWG18

### External Contact Classification — PLC (NPN Transistor)

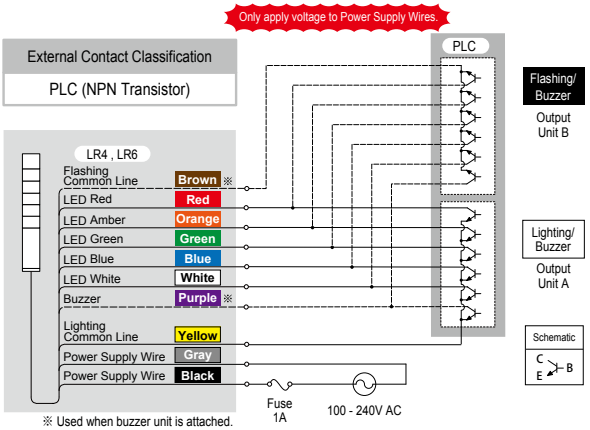

# Multi-color Wiring Diagrams

Multi-color LED Unit wire colors are RED / ①; Green / ③; Blue / ④. Wire colors Orange / ② and White / ⑤ are not used.
Refer to the Complete User's Manual for details.

LR6-E-MZ Lighting

| LED Color | Wire Color |
|---|---|
| Red | Red |
| Green | Green |
| Blue | Blue |
| Amber | Red + Green |
| Purple | Red + Blue |
| Cyan | Green + Blue |
| White | Red + Green + Blue |

## Lighting / Flashing / Buzzer (LR6-E-MZ)

Product Specifications **02** 24V DC

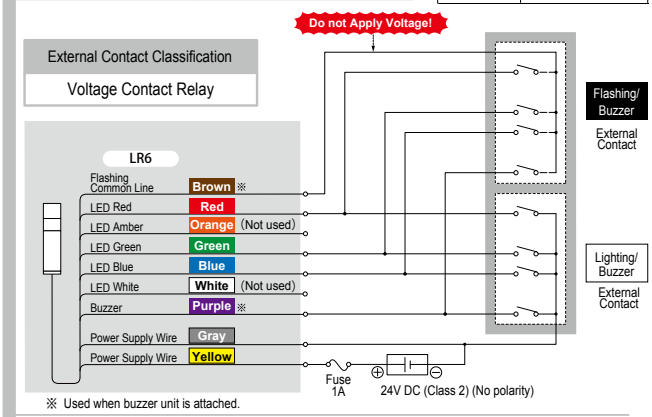


※ Used when buzzer unit is attached.

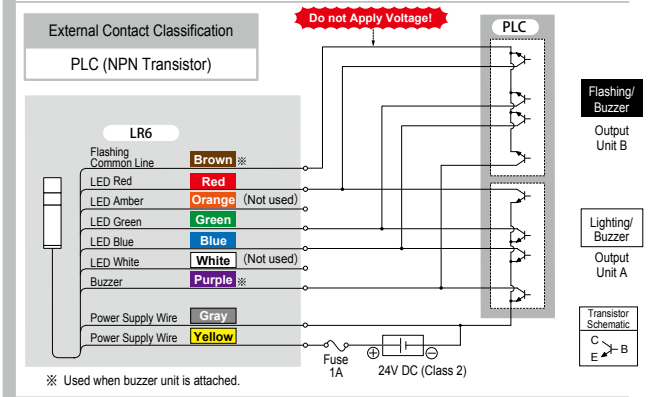


※ Used when buzzer unit is attached.

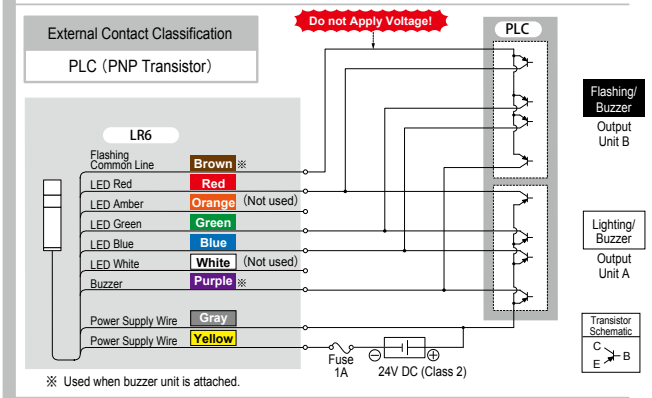


※ Used when buzzer unit is attached.

**Point**

- When flashing the LR6-E-MZ simultaneously with the LR6-E-R(Z)/Y(Z)/G(Z)/B(Z)/C, the flashing cycle of the LR6-E-MZ may shift from the other LED units.

# M12 (LR6-WC)Wiring Diagrams

Wiring Example Index

LED Red ⑥
Function Name
PIN No. (WC Direct Mount with M12 Connector )

## Lighting / Buzzer ( LR6-WC )

Product Specifications **02** **WC** 24V DC

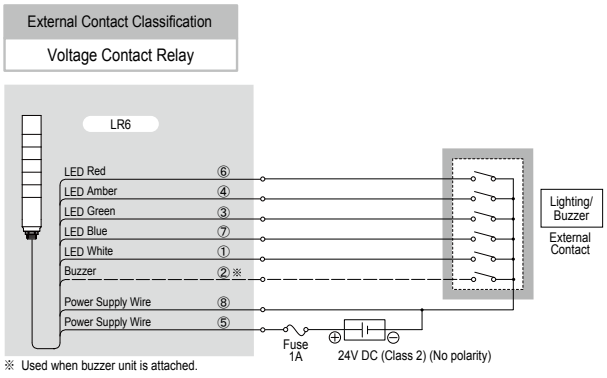


※ Used when buzzer unit is attached.

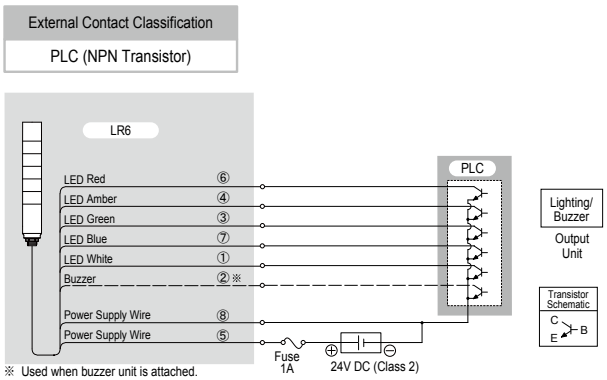


※ Used when buzzer unit is attached.

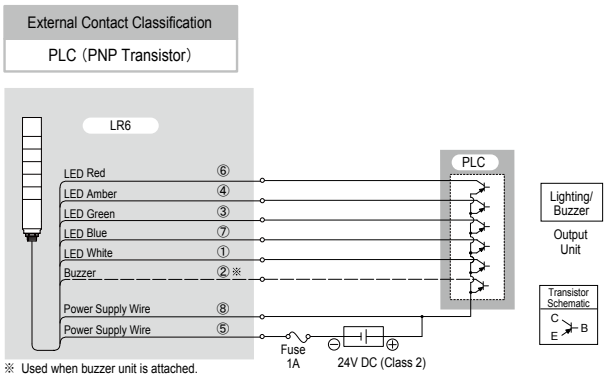


※ Used when buzzer unit is attached.

**Point**

- The flashing function cannot be used.

## [WT],[KT] Terminal Type

### Wiring Method

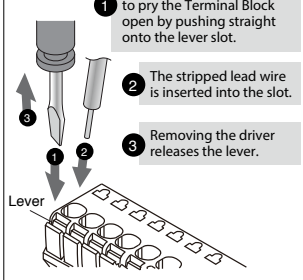


### Terminal Block Array

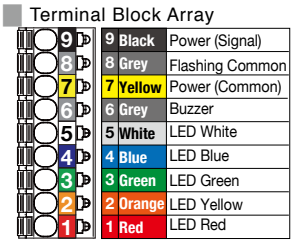


Recommended lead wire specification

| Wire Type | Wire (Solid) | Wire (Frayed) |
|---|---|---|
| UL1007 / UL1430 | 0.14 - 1.5mm | AWG30 - 14 |

- Temperature rating should be above 75°C, and the conductor material should be of copper wire.

## M12 Connector Pin Layout

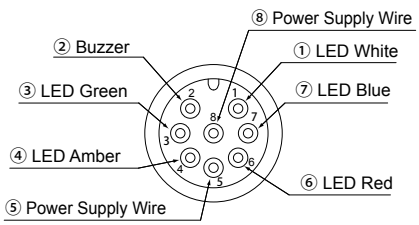


**Point**

- It is recommended to use the M12 Connector Cable (Optional Part) for wiring.

# Wiring Diagrams

■**Wire Type & Wire Gauge**
Wire Type……UL2464
Wire Gauge…[01] 12V DC [02] 24V DC
Signal Wire : AWG24
Power Supply Wire : AWG24

Wiring Example Index: LED Red / RED / ① (Function Name; Lead Wire Color (Cable type); PIN No.) <Note> The lead wire color does not indicate the LED illuminescence Color. WT Direct Mount with Terminal Brock, KT Mounting Bracket with knock-outs Terminal Brock
Refer to pg. 16 "Terminal Block Array"

## Product Specifications 01 12V DC 02 24V DC

### External Contact Classification: Voltage Contact Relay

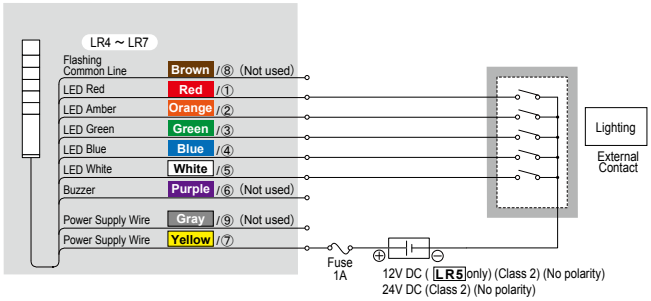


### External Contact Classification: PLC (NPN Transistor)

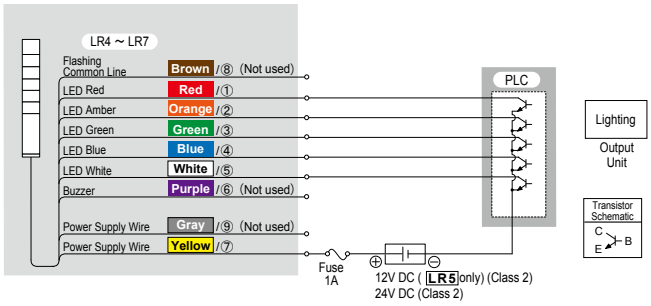


### External Contact Classification: PLC (PNP Transistor)

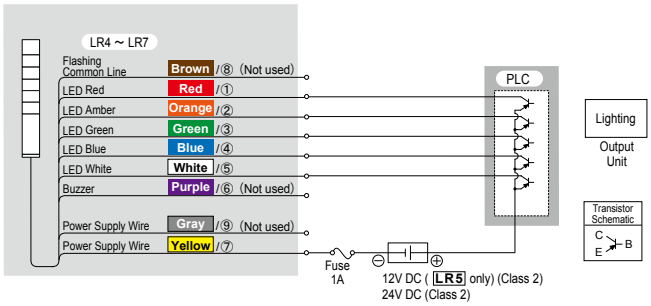


## Product Specifications 01 12V DC 02 24V DC

### External Contact Classification: Voltage Contact Relay

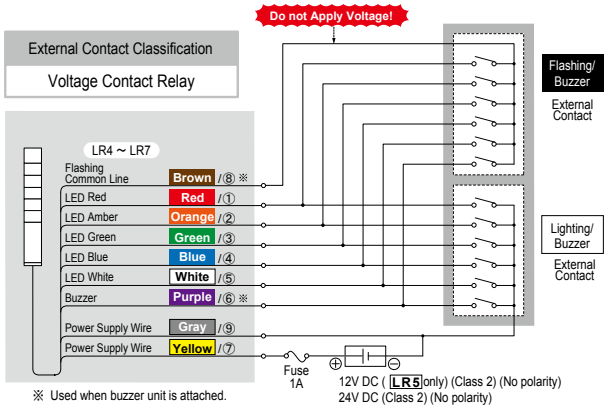


※ Used when buzzer unit is attached.

### External Contact Classification: PLC (NPN Transistor)

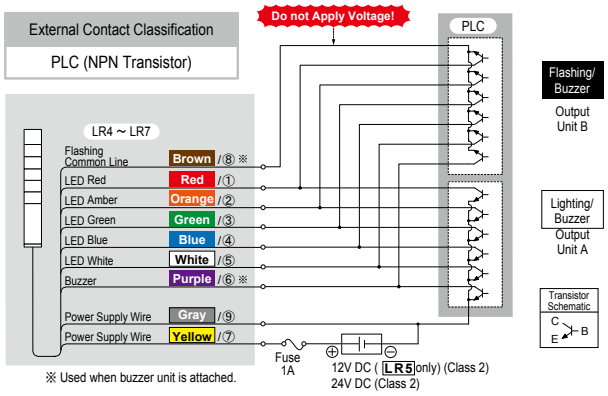


※ Used when buzzer unit is attached.

### External Contact Classification: PLC (PNP Transistor)

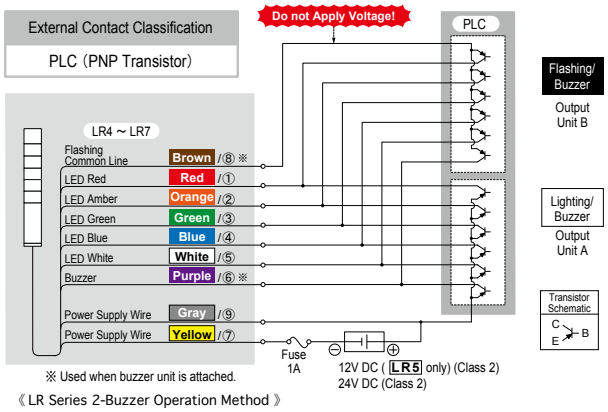


※ Used when buzzer unit is attached.

《LR Series 2-Buzzer Operation Method》
Connecting the Buzzer wire (Purple) with the Flashing Common wire (Brown) will control the selection of two different buzzer sounds.

## Product Specifications M2 100 - 240 V AC

### External Contact Classification: Voltage Contact Relay

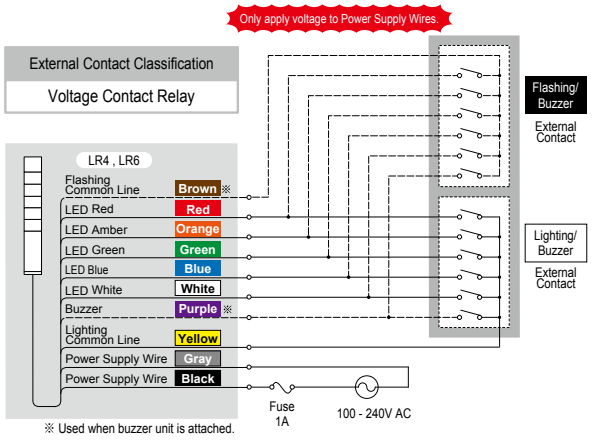


※ Used when buzzer unit is attached.

■**Wire Type & Wire Gauge**
Wire Type……UL2464
Wire Gauge…[M2] 100-240V AC
Signal Wire : AWG24
Power Supply Wire : AWG18

### External Contact Classification: PLC (NPN Transistor)

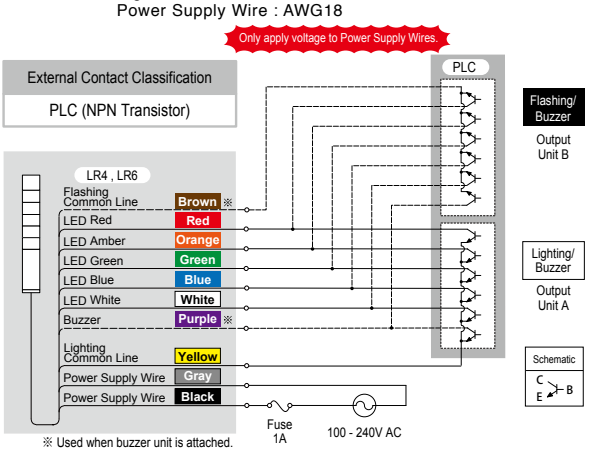


※ Used when buzzer unit is attached.

## Signal Tower

# LR Series Optional Parts

## Direct Mount Brackets

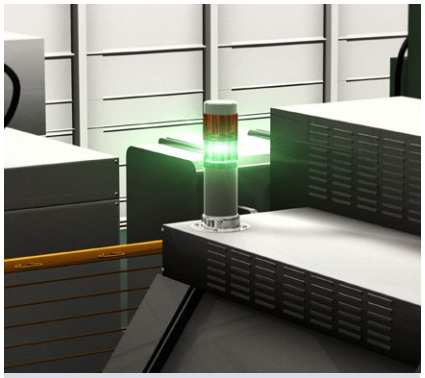

### Circular Bracket

**Model:** SZW-001W

Material: SPCE

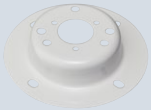

■ Mounting Dimensions (Unit: mm)

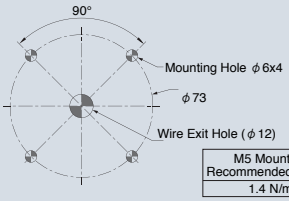


| M5 Mounting Recommended Torque |
|---|
| 1.4 N/m |

### Wall-mount Bracket

**Model:** SZK-002W/U/K

Material: PC

**SZK-003W/U/K**

Material: PC

**SZK-004W**

Material: PC

■ Mounting Dimensions (Unit: mm)

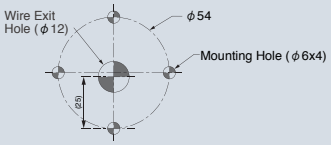


| M5 Mounting Recommended Torque |
|---|
| 1.4 N/m |

※ The wiring can exit through the bracket.

※An M16xP1.5 cable gland attachment needs to be purchased in addition

## N Type Aluminum Pole Brackets

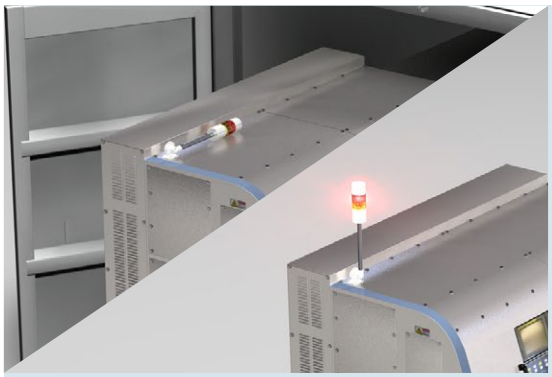

### Folding Bracket

**Model:** SZQ-001W

Accessories: Pole Waterproof Ring
Binding Head Tapping Screw (2 pcs.)

Material: PC

■ Folding Range

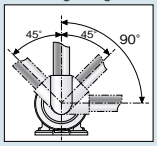


■ Mounting Dimensions (Unit: mm)

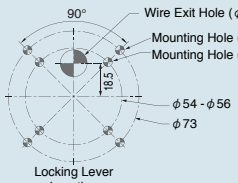


| M5 Mounting Recommended Torque |
|---|
| 1.4 N/m |

See the Movie!

1. Depressing a locking lever on the left side of the folding bracket releases it to be lowered.

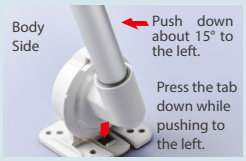


2. Press the folding bracket forward and push about 15° in the clockwise direction.

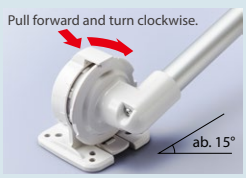


3. The folding bracket is pushed down to the right (clockwise) until it locks in place with a "Click!" sound.

## T Type Aluminum Pole Brackets

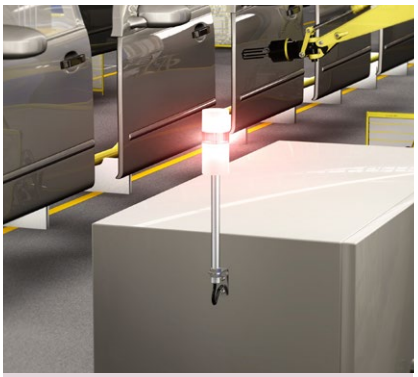

### L-bracket

**Model:** SZL-001

Material: SPHC-P

■ Mounting Dimensions (Unit: mm)

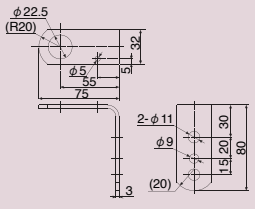


| Screw,Nut |
|---|
| ※1 : M8×2pcs. |
| ※2 : M10×2pcs. |
| Recommended screw Torque |
| 12.2 Nm |

# N Type Aluminum Pole Brackets

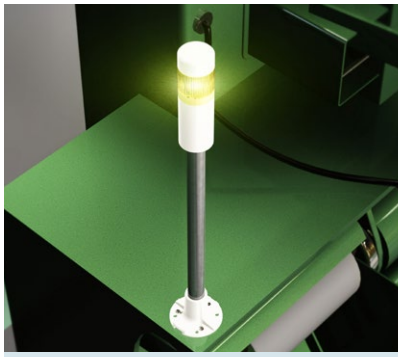

## Circular Multiple-mount Bracket

**Model:** SZP-001W/U/K

Accessories: Waterproof Packing
Pole Waterproof Ring
Binding Head Tapping Screw ( 2 pcs.)

Material: PC

■ Mounting Dimensions (Unit: mm)

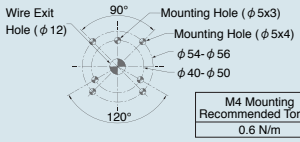


M4 Mounting Recommended Torque 0.6 N/m

## Circular Bracket

**Model:** SZP-002U

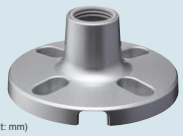

Accessories: Pole Waterproof Ring
Binding Head Tapping Screw ( 2 pcs.)

Material: ADC12

■ Mounting Dimensions (Unit: mm)

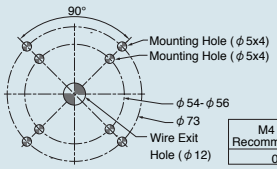


M4 Mounting Recommended Torque 0.6 N/m

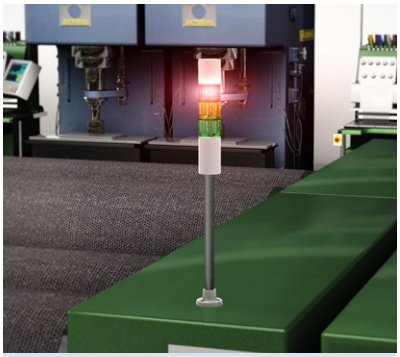

## Circular Bracket

**Model:** SZP-003W/U/K

Accessories: Waterproof Packing
Pole Waterproof Ring
Binding Head Tapping Screw ( 2 pcs.)

Material: PC

■ Mounting Dimensions (Unit: mm)

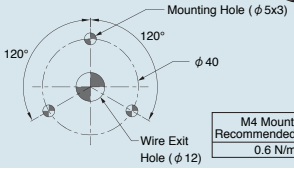


M4 Mounting Recommended Torque 0.6 N/m

# N & T Aluminum Pole Brackets

## Wall-mount Bracket

**Model:** SZK-001U

Accessories: Hexagon Socket Set Screw (2 pcs.)

Material: ADC12

■ Mounting Dimensions (Unit: mm)

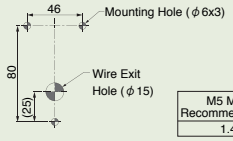


M5 Mounting Recommended Torque 1.4 N/m

# 1/2" Type Pole Brackets

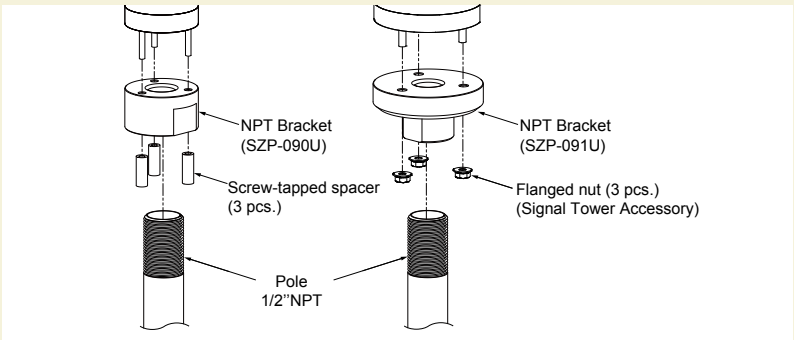


## NPT Bracket

**Model:** SZP-090U

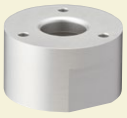

Accessories: Screw-tapped spacer (3 pcs.)

Material: AL

■ Mounting Dimensions (Unit: mm)

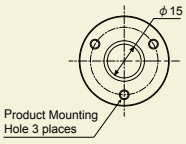


Recommended Torque 0.6 N/m

## SZP-091U

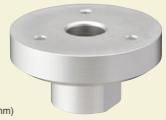

Material: AL

■ Mounting Dimensions (Unit: mm)

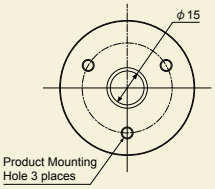


Recommended Torque 0.6 N/m

## Replacement Parts

### ■ O-ring (5 per pack)/Headcover

O-ring 40
Model: B25110065-F1

Headcover 40
Model:
[W] B32310070-7F1
[U] B32310070-9F1

O-ring 50
Model: B25110066-F1

Headcover 50
Model:
[W] B32310071-7F1
[K] B32310071-8F1
[U] B32310071-9F1

O-ring 60
Model: B25110067-F1

Headcover 60
Model:
[W] B32310072-7F1
[U] B32310072-9F1

O-ring 70
Model: B25110068-F1

Headcover 70
Model:
[W] B32310073-7F1
[K] B32310073-8F1
[U] B32310073-9F1

### ■ Base Unit

• Adaptor for Aluminum Pole
O-ring, Binding Head Tapping Screw for pole fixing and Pole Waterproof Ring are included.

LR4
Model:
[W] B22210159-7F1
[U] B22210159-9F1

LR5
Model:
[W] B22210160-7F1
[K] B22210160-8F1
[U] B22210160-9F1

LR6
Model:
[W] B22210161-7F1
[U] B22210161-9F1

LR7
Model:
[W] B22210178-7F1
[K] B22210178-8F1
[U] B22210178-9F1

### ■ Terminal Block
(LR5 & LR7 only)

Model: Z69544511-F1

### ■ Filter Sheet (5 per pack)

LR4 LED Unit Sheet
Model: B25310067-4F1

LR5 LED Unit Sheet
Model: B25310067-5F1

LR6 LED Unit Sheet
Model: B25310067-6F1

LR7 LED Unit Sheet
Model: B25310067-7F1

## Signal Tower

# Corresponding Model · Pole List

## Each Bracket Compatible Model

| Model | Model Name | LR4 | LR5 | LR6 | LR7 |
|---|---|---|---|---|---|
| | **SZP-001W[U][K]** | PJ, QJ | PJ, KT ※1 | PJ, QJ | KT ※1 |
| | **SZP-002U** | PJ, QJ | PJ, KT ※1 | PJ, QJ | KT ※1 |
| | **SZP-003W[U][K]** | PJ, QJ | PJ, KT ※1 | PJ, QJ | KT ※1 |
| | **SZP-090U** | WJ | WJ, WT, KT ※2 | - | - |
| | **SZP-091U** | - | - | WJ | WJ, WT, KT ※2 |
| | **SZL-001** | LJ | LJ, KT ※1 | LJ | LJ, KT ※1 |
| | **SZQ-001W** | PJ, QJ | PJ, KT ※1 | PJ, QJ | KT ※1 |
| | **SZK-001U** | PJ, QJ | PJ, KT ※1 | PJ, QJ | KT ※1 |
| | **SZK-002W[U][K]** | WJ | WJ, WT, KT ※2 | - | - |
| | **SZK-003W[U][K]** | - | - | WJ | WJ, WT, KT ※2 |
| | **SZK-004W** | - | - | WJ | WJ, WT, KT ※2 |
| | **SZW-001W** | WJ | WJ, WT, KT ※2 | WJ | - |

※1 Required pole and pole waterproof ring are not included with KT.　※2 KT Direct Mount (Using accessory)

## Aluminum Poles

□ Aluminum Poles（Binding Head Tapping Screw (2pcs.) included.)

※If the pole is to be cut by the customer, it cannot be cut with a pole cutter. Please use a band saw, jigsaw, or sawing machine, etc.

※To convert from direct mount to pole mount, be sure to purchase the appropriate bracket and pole combination to make the change.

| Model Type | Model Name | SZP-001W | SZP-002U | SZP-003W | SZQ-001W | SZK-001U | SZL-001 |
|---|---|---|---|---|---|---|---|
| AN Type　ANK Type | **POLE22-0100AN[K] 100mm** | ○ | ○ | ○ | ○ | ○ | × |
| | **POLE22-0300AN[K] 300mm** | ○ | ○ | ○ | ○ | ○ | × |
| | **POLE22-0500AN 500mm** | × | ○ | × | × | ○ | × |
| | **POLE22-0800AN[K] 800mm** | × | ○ | × | × | ○ | × |
| | **POLE22-1000AN 1000mm** | × | ○ | × | × | ○ | × |
| T Type | **POLE22-0100AT 100mm** | × | × | × | × | ○ | ○ |
| | **POLE22-0300AT 300mm** | × | × | × | × | ○ | ○ |
| | **POLE22-0500AT 500mm** | × | × | × | × | ○ | ○ |
| | **POLE22-0800AT 800mm** | × | × | × | × | ○ | ○ |
| | **POLE22-1000AT 1000mm** | × | × | × | × | ○ | ○ |

# Compatible Direct Mount Bracket

SZW-940U

SZW-950U

SZW-960U

SZW-970U

External Dimensions (Unit: mm)

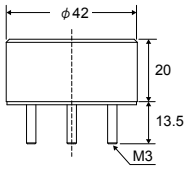

Maximum Board Thickness: 10

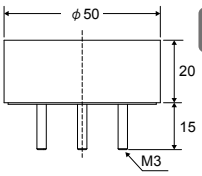

Maximum Board Thickness: 10

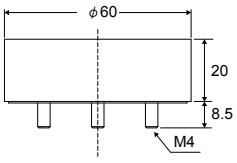

Maximum Board Thickness: 4

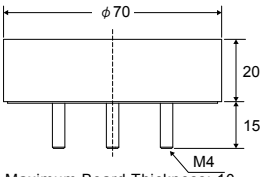

Maximum Board Thickness: 10

Use these conversion brackets to mount the LR Series Direct Mounting model with mounting holes that already exist for the Signal Tower. If you cannot draw new mounting holes where you were using a previous model, use a compatible direct mount bracket to mount the LR Series.

| Accessory | |
|---|---|
| SZW-940U<br>SZW-950U | Nut with Flange (M3) x 3 |
| SZW-960U<br>SZW-970U | Nut with Flange (M4) x 3 |

| Model Name | Size of Corresponding Signal Tower | Corresponding Models | |
|---|---|---|---|
| | | Previous | New |
| **SZW-940U** | ϕ40 | LCE-W<br>LCE-AW | LR4-WJ |
| **SZW-950U** | ϕ50 | LE-W<br>LES-AW<br>LU5 | LR5-WJ<br>LR5-WT |
| **SZW-960U** | ϕ60 | LME-W | LR6-WJ |
| **SZW-970U** | ϕ70 | LHE<br>LU7 | LR7-WJ<br>LR7-WT |

Operation

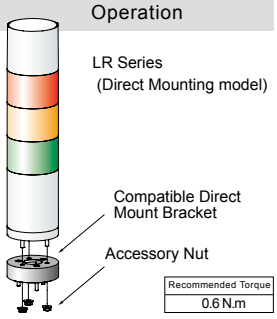


⚠ Pole mounting is not compatible.

■ Pole Sectional View
(Unit: mm)

Previous product　New product

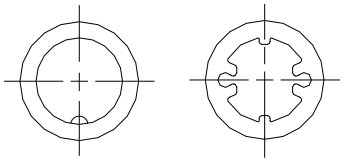

| | Type | Material | Pole Diameter |
|---|---|---|---|
| Previous product | LCE-A, LCS | Steel | ϕ17.3 |
| | LE, LES | Steel | ϕ17.3 |
| | LU5 | - | - |
| | LME, LMS | L: Steel, P: Aluminum | ϕ21.7 |
| | LHE | - | - |
| | LU7 | - | - |
| New product | LR | Aluminum | ϕ21.7 |

# Pole-compatible Adaptor

This conversion adaptor enables mounting LR Series Pole model (21.7mm) where a previous pole model (17.3mm) Signal Tower was mounted. By using this adaptor, you can mount a new unit where you were using a previous pole (17.3mm).

SZP-917U

Dimensions
(Unit: mm)

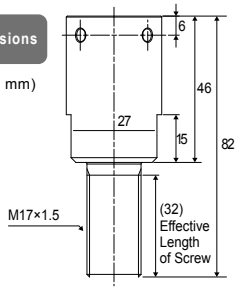


| Accessory |
|---|
| Hexagon Socket Set Screws x 2 |
| Hexagon Nut (M17) x 1 |
| Plain Washer (ϕ17.5 × ϕ28 × t2.0) x 1 |

| Model Name | Corresponding Models | |
|---|---|---|
| | Previous | New |
| **SZP-917U** | LCE/LCE-A<br>LCS/LCS-A<br>LE/LES-A | LR□-□□□LJ□□<br>POLE22-□□□□AT |

Operation (Unit: mm)

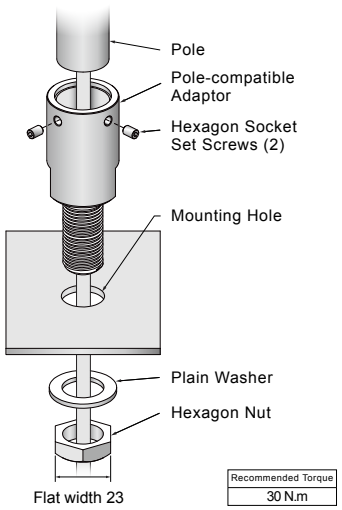

# HSST

Compatible with WD-Z2 Series

[When lights are off]

Control signal lights ON and OFF with a 3-point switch for red, amber, and green.
*Cannot control flashing / buzzer.

IP54 (For signals only, switch box is IP20) RoHS 50φ Switch ON / OFF UL

| | |
|---|---|
| Colors | Red, Amber, Green, (Clear globe) |
| Globe | Polycarbonate resin, high shock resistance and heat resistance |

Maintenance-free LED illumination
3-button switch box with mounting screws
AC power adapter (100-240VAC) with 5ft. cable
LED colors: red, amber, green.

## Contents

The HSST Kit Includes:
① Signal Tower x1
② Long pole x 1
③ Metal fitting for mounting x 1
④ Screw x 1
⑤ Bracket x 1
⑥ Mounting screws x 2
⑦ Double-sided tape x 1
⑧ Switch box x 1
⑨ AC adaptor x 1

## Assembly Process

Mounting example

Assembly Process Alarms
- Problem Alarm
- Parts Low Alarm
- Help Needed Alarm

## Call center

## Specifications

| | | | | |
|---|---|---|---|---|
| Model | | HSST-3M2-RYG | Mass (Tolerance: ±10%) | Signal Tower (short pole) | 0.36kg |
| Rated Voltage | | 100 - 240V AC (50/60Hz) | | Signal Tower (long pole) | 0.47kg |
| Operating Voltage Range | | Rated Voltage ±10% | | Bracket | 0.33kg |
| Rated Power Consumption | Maximum | When all tiers are illuminated | | Switch box | 0.07kg |
| | | 4W | | AC Adaptor | 0.14kg |
| Operating Temperature Range | | 0˚C - +40˚C | | Metal fitting for mounting, screw | 0.05kg |
| Mounting location | | Indoors | | | |
| Mounting direction | | Upright | | | |

## Dimensions (mm)

① Signal Tower

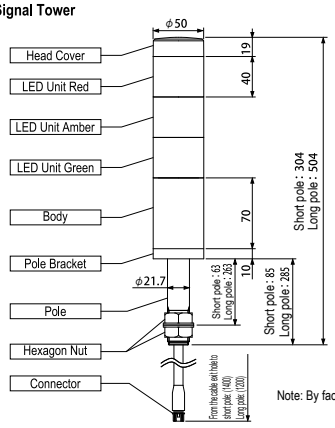


② Long pole

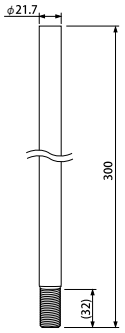


⑤ Bracket

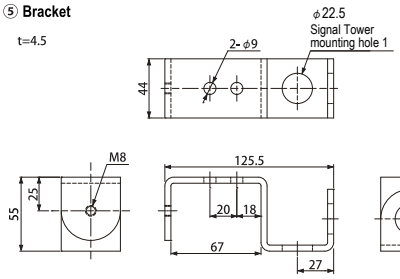


⑥ Mounting screws (tapping screw)

⑦ Double-sided tape

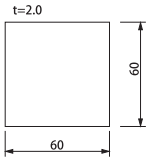


⑧ Switch box

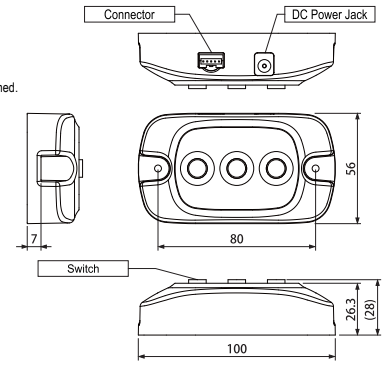


⑨ AC Adaptor

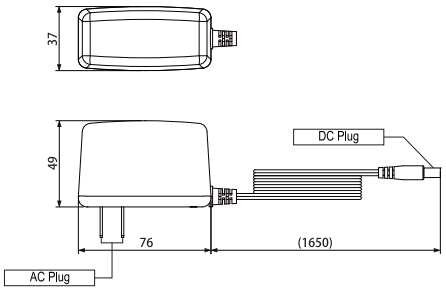


Note: By factory default, the short pole is attached.

③ Metal fitting for mounting

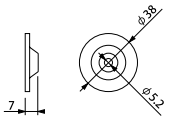


④ Screw

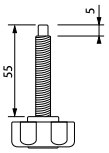


## Mounting Method

● When mounting on a table, and so on

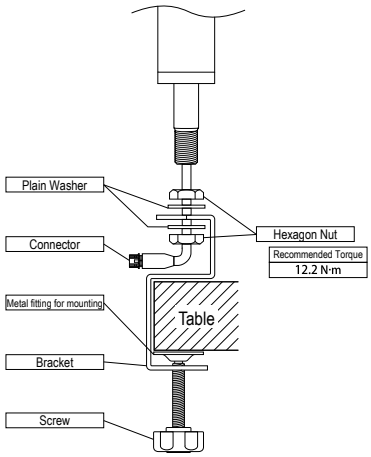


● When mounting on a partition

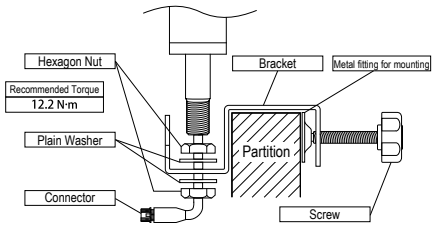


● When mounting on a wall

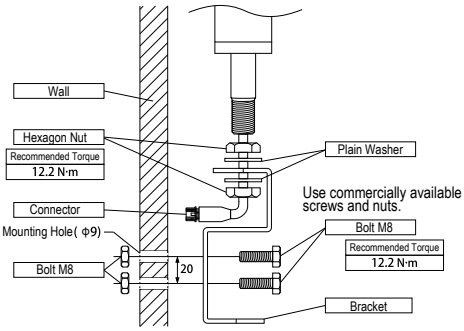


## Wiring Diagram

● Connect the Signal Tower cable and AC Adaptor to the switch box connector and DC jack.
Apply the rated voltage to the AC Adaptor's AC plug.
Each time you press the switch, the corresponding color on the Signal Tower's LED Unit turns on and off.

| Switch status | |
|---|---|
| Light off | Lighting |
| Switch | Switch |

■ Switch box

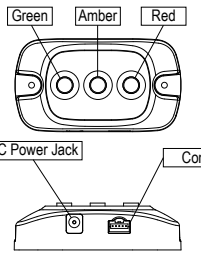


■ Signal Tower

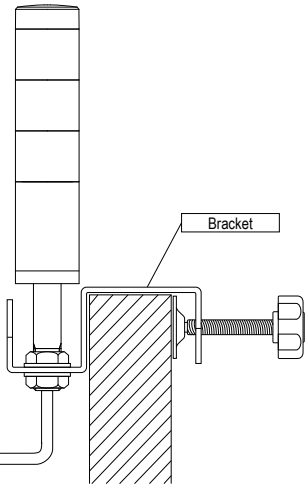


■ AC Adaptor

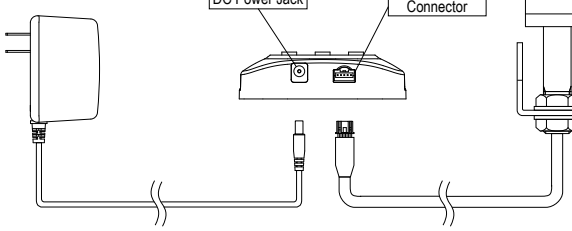

# ME-A/MES-A



ME-A model (Lighting, Standard Body 200mm model)
MES-A model (Lighting, Short Body 40mm model)

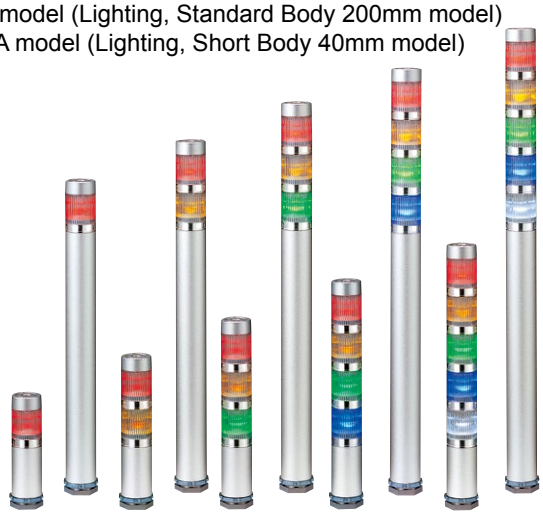

IP42 RoHS UL CE 25φ

| | |
|---|---|
| Colors | Red, Amber, Green, Blue, White |
| Globe | Polycarbonate lens with high shock resistance and heat resistance |

Direct mounted, 25mm diameter, super slim signal towers featuring corrosion resistant aluminum bodies. LED unit lenses are clear when off and color when activated to reduce false indication.

- Hybrid prism-cut lens enhance visibility from any direction and distance
- Direct mounts to a single hole
- Interchangeable modules eliminate the need to rewire
- Superior impact and heat resistant polycarbonate lens for superior durability and light emission
- Available Colors: Red, Amber, Green, Blue, Clear/White

● Standard Colors:
1 Tier model / Red (-R), Amber (-Y), Green (-G), Blue (-B), White (-C)
2 Tier model / Red-Amber (-RY), Red-Green (-RG)
3 Tier model / Red-Amber-Green (-RYG)
4 Tier model / Red-Amber-Green-Blue (-RYGB)
5 Tier model / Red-Amber-Green-Blue-White (-RYGBC)

## Specifications

| Standard Body (mm) | | | | |
|---|---|---|---|---|
| Model | Rated Voltage | Number of tiers | Power Consumption | Mass |
| **ME-102A** | 24V DC | 1 | 0.6W | 0.22kg |
| **ME-102A** | | | 0.6W | |
| **ME-102A** | | | 0.5W | |
| **ME-102A** | | | 0.5W | |
| **ME-102A** | | | 0.5W | |
| **ME-202A** | 24V DC | 2 | 1.2W | 0.23kg |
| **ME-202A** | | | 1.1W | |
| **ME-202A** | | | 1.1W | |
| **ME-202A** | | | 1.1W | |
| **ME-302A** | 24V DC | 3 | 1.7W | 0.24kg |
| **ME-302A** | | | 1.7W | |
| **ME-302A** | | | 1.7W | |
| **ME-402A** | 24V DC | 4 | 2.3W | 0.25kg |
| **ME-402A** | | | 2.3W | |
| **ME-502A** | 24V DC | 5 | 2.8W | 0.26kg |

| Short Body (mm) | | | | |
|---|---|---|---|---|
| Model | Rated Voltage | Number of tiers | Power Consumption | Mass |
| **MES-102A** | 24V DC | 1 | 0.6W | 0.12kg |
| **MES-102A** | | | 0.6W | |
| **MES-102A** | | | 0.5W | |
| **MES-102A** | | | 0.5W | |
| **MES-102A** | | | 0.5W | |
| **MES-202A** | 24V DC | 2 | 1.2W | 0.13kg |
| **MES-202A** | | | 1.1W | |
| **MES-202A** | | | 1.1W | |
| **MES-202A** | | | 1.1W | |
| **MES-302A** | 24V DC | 3 | 1.7W | 0.14kg |
| **MES-302A** | | | 1.7W | |
| **MES-302A** | | | 1.7W | |
| **MES-402A** | 24V DC | 4 | 2.3W | 0.15kg |
| **MES-402A** | | | 2.3W | |
| **MES-502A** | 24V DC | 5 | 2.8W | 0.16kg |

● To use Green, Blue, White instead of Red, Amber, there is an additional cost per unit.

### ■ Replacement Parts for Changing Colors

| Replacement Parts | Part Number |
|---|---|
| Red LED Unit (Clear lens model) | B72100223-1F1 |
| Amber LED Unit (Clear lens model) | B72100223-2F1 |
| Green LED Unit (Clear lens model) | B72100115-3F1 |
| Blue LED Unit (Clear lens model) | B72100115-4F1 |
| White LED Unit (Clear lens model) | B72100115-7F1 |

| Replacement Parts | Part Number |
|---|---|
| Shaft for 1 tier | S33552110-0346F1 |
| Shaft for 2 tiers | S33552110-0376F1 |
| Shaft for 3 tiers | S33552110-03108F1 |
| Shaft for 4 tiers | S33552110-03138F1 |
| Shaft for 5 tiers | S33552110-03168F1 |

## Model Code

# ME-302A-RYG

Model

| | |
|---|---|
| ME | Standard Body Type |
| MES | Short Body Type |

Number of tiers

Rated Voltage

| | |
|---|---|
| 02 | 24V DC |

Colors

| | |
|---|---|
| R | Red |
| Y | Amber |
| G | Green |
| B | Blue |
| C | White |

From Top to Bottom

## Optional Parts

For details, see pages 182 to 187.

| Optional Parts | Model |
|---|---|
| L Angle | SZL-001 |

## Dimensions (mm)

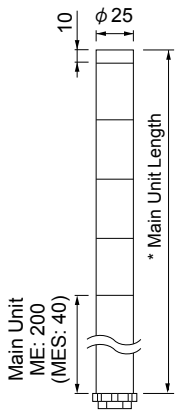


**Type ME-A**

| * Main Unit Length | |
|---|---|
| 1 tier: | 240 |
| 2 tiers: | 270 |
| 3 tiers: | 300 |
| 4 tiers: | 330 |
| 5 tiers: | 360 |

**Type MES-A**

| * Main Unit Length | |
|---|---|
| 1 tier: | 80 |
| 2 tiers: | 110 |
| 3 tiers: | 140 |
| 4 tiers: | 170 |
| 5 tiers: | 200 |

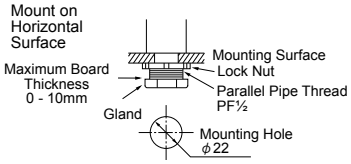


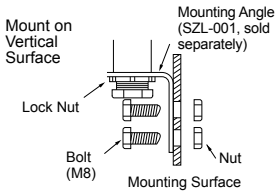


* Nuts and bolts not included.

## Wiring Diagram

### [Type ME/MES-☐☐☐A]

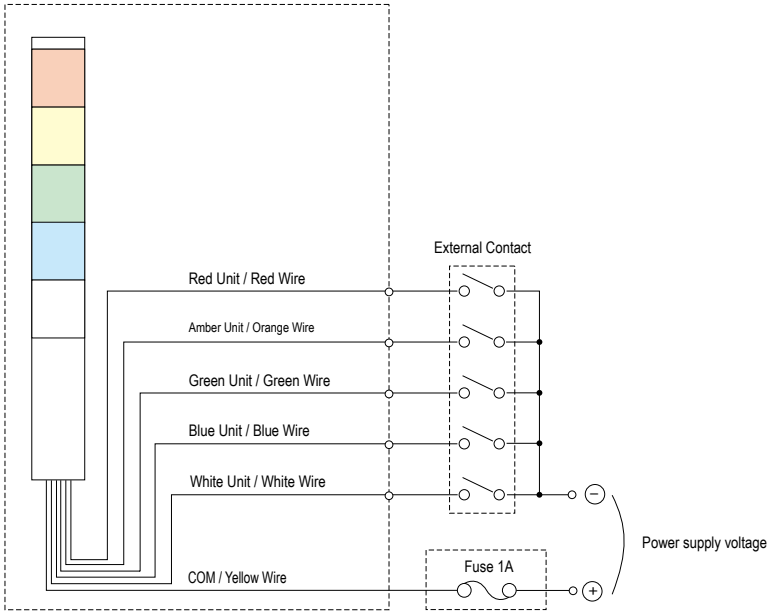


### ■ Corresponding Signal Wire Colors

| LED Unit Colors | Corresponding Signal Wire Color |
|---|---|
| Red | Red |
| Amber | Orange |
| Green | Green |
| Blue | Blue |
| White | White |

| | Nominal Cross-sectional Area | Wire Type | Wire Length |
|---|---|---|---|
| Type ME-A | 0.3mm² | UL1007 | 300mm |
| Type MES-A | 0.3mm² | UL1007 | 460mm |

(For multiple LED units of the same color, they illuminate at the same time.)

### ■ Signal Wire Voltage and Current per tier

| Voltage | Signal Wire Voltage | Signal Wire Current |
|---|---|---|
| 24V DC | 24V DC | Red-Amber: 25.2mA<br>Green-Blue-White: 13.3mA |

* Set aside ample capacity for the external contact, considering the Signal Wire Current and Inrush Current.

### Example: 24V DC driven by NPN Transistor

**24V DC, NPN type transistor**

● Lighting type

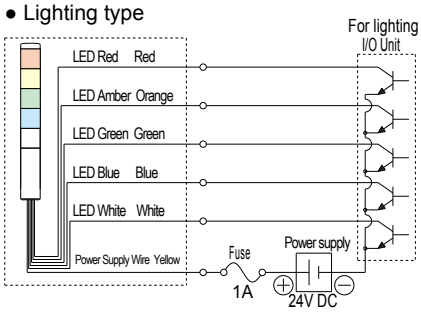


### ■ Transistor Capacity

| Model | Transistor (NPN) |
|---|---|
| Current Capacity | Ic≧50mA |
| Withstand Voltage | Vc≧35V |
| Leakage Current | IL< 0.1mA |

# MP/MPS



Type MP (Lighting, Standard Body 220mm model)
Type MPS (Lighting, Short Body 45mm model)

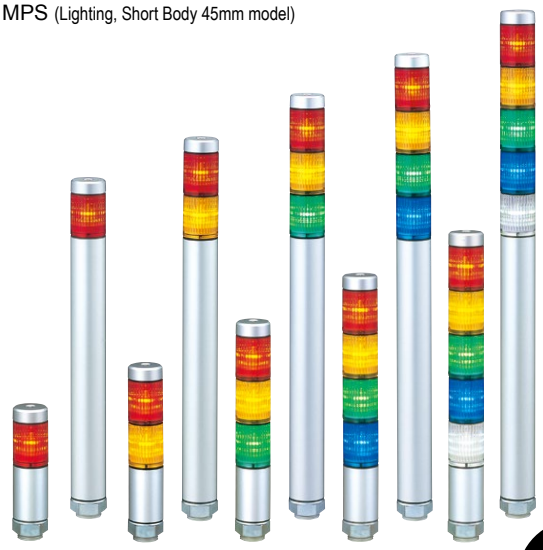

IP65 RoHS UL CE 30φ

Optional MP-B Buzzer

| | |
|---|---|
| Colors | Red, Amber, Green, Blue, White |
| Globe | The material is AS resin, with high weather resistance and translucence. |

30mm diameter, slim signal towers featuring corrosion resistant aluminum bodies and an optional 80 dB audible alarm.

- Hybrid prism-cut lens enhance visibility from any direction and distance
- Direct mounts to a single hole
- Interchangeable modules eliminate the need to rewire
- Sleek and smooth form carrying an IP65 protection rating for dust and water resiliency
- Available Colors: Red, Amber, Green, Blue, Clear/White

● Standard Colors:
1 Tier model / Red (-R), Amber (-Y), Green (-G), Blue (-B), White (-C)
2 Tier model / Red-Amber (-RY), Red-Green (-RG)
3 Tier model / Red-Amber-Green (-RYG)
4 Tier model / Red-Amber-Green-Blue (-RYGB)
5 Tier model / Red-Amber-Green-Blue-White (-RYGBC)

## Specifications

| Standard Body | | | | |
|---|---|---|---|---|
| Model | Rated Voltage | Number of tiers | Power Consumption | Mass |
| **MP-102** | 24V AC/DC | 1 | 0.7W | 0.21kg |
| **MP-202** | | 2 | 1.4W | 0.23kg |
| **MP-302** | | 3 | 2.0W | 0.25kg |
| **MP-402** | | 4 | 2.6W | 0.27kg |
| **MP-502** | | 5 | 3.2W | 0.29kg |

| Short Body | | | | |
|---|---|---|---|---|
| Model | Rated Voltage | Number of tiers | Power Consumption | Mass |
| **MPS-102** | 24V AC/DC | 1 | 0.7W | 0.11kg |
| **MPS-202** | | 2 | 1.4W | 0.13kg |
| **MPS-302** | | 3 | 2.0W | 0.15kg |
| **MPS-402** | | 4 | 2.6W | 0.17kg |
| **MPS-502** | | 5 | 3.2W | 0.19kg |

● You can order custom color combinations from one unit. Contact us for the lead time on custom orders.
● There may be additional unit costs when using multiple units in the same color, or a custom combination that uses only non-standard colors. Please contact us for details.

■ Replacement Parts for Changing Colors

| Replacement Parts | Part Number |
|---|---|
| Red LED Unit | B72100182-1F1 |
| Amber LED Unit | B72100182-2F1 |
| Green LED Unit | B72100182-3F1 |
| Blue LED Unit | B72100182-4F1 |
| White LED Unit | B72100182-7F1 |

| Replacement Parts | Part Number |
|---|---|
| Shaft for 1 tier | S33552120-0355F1 |
| Shaft for 2 tiers | S33552120-0390F1 |
| Shaft for 3 tiers | S33552120-03125F1 |
| Shaft for 4 tiers | S33552120-03160F1 |
| Shaft for 5 tiers | S33552120-03195F1 |

## Model Code

**MP-302-RYG**

Model
| | |
|---|---|
| MP | Standard Body Type |
| MPS | Short Body Type |

Number of tiers

Rated Voltage
| | |
|---|---|
| 02 | 24V AC/DC |

Colors
| | |
|---|---|
| R | Red |
| Y | Amber |
| G | Green |
| B | Blue |
| C | White |

From Top to Bottom

## Dimensions (mm)

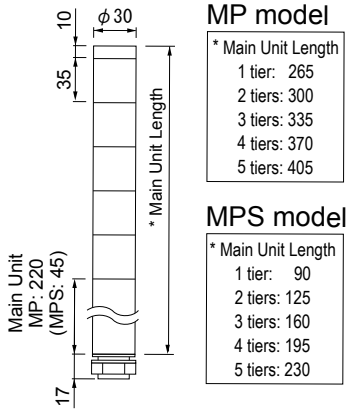


MP model

| * Main Unit Length | |
|---|---|
| 1 tier: | 265 |
| 2 tiers: | 300 |
| 3 tiers: | 335 |
| 4 tiers: | 370 |
| 5 tiers: | 405 |

MPS model

| * Main Unit Length | |
|---|---|
| 1 tier: | 90 |
| 2 tiers: | 125 |
| 3 tiers: | 160 |
| 4 tiers: | 195 |
| 5 tiers: | 230 |

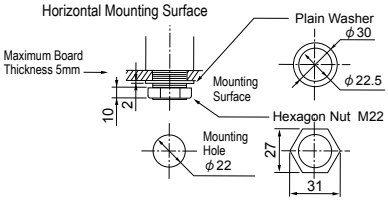


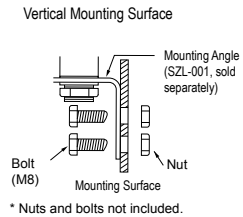


* Nuts and bolts not included.

## Wiring Diagram

### [MP/MPS-☐☐☐ model]

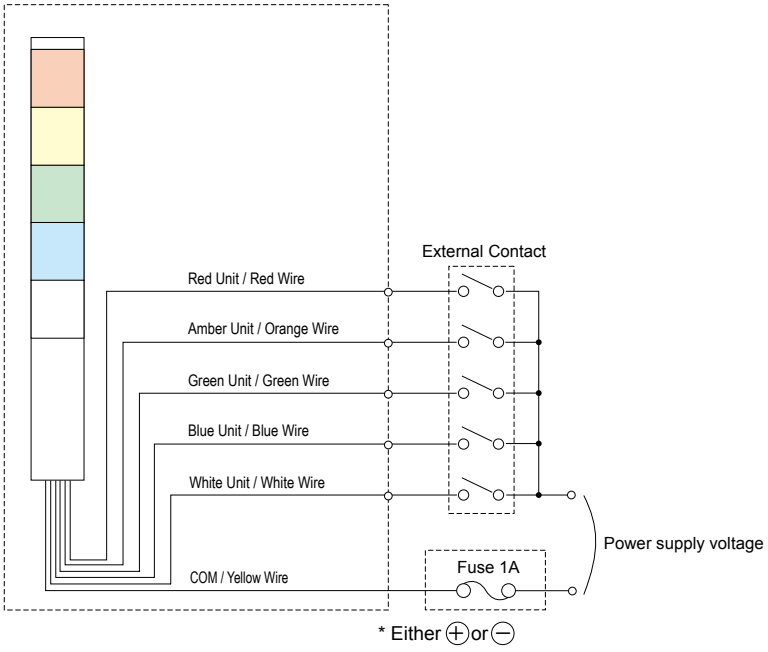


### ■ Corresponding Signal Wire Colors

| LED Unit Colors | Corresponding Signal Wire Color |
|---|---|
| Red | Red |
| Amber | Orange |
| Green | Green |
| Blue | Blue |
| White | White |

| | Nominal Cross-sectional Area | : | Wire Type | : | Wire Length |
|---|---|---|---|---|---|
| MP model | 0.3mm² | : | UL1007 | : | 1000mm |
| MPS model | 0.3mm² | : | UL1007 | : | 1180mm |

(For multiple LED units of the same color, they illuminate at the same time.)

### ■ Signal Wire Voltage and Current per tier

| Voltage | Signal Wire Voltage | Signal Wire Current |
|---|---|---|
| 24V DC | 24V DC | Red: 29.0mA, Amber: 29.5mA<br>Green-Blue-White: 17.1mA |
| 24V AC | 24V AC | |

* Set aside ample capacity for the external contact, considering the Signal Wire Current.

### Example: 24V DC driven by NPN/PNP Transistor

#### 24V DC, NPN type transistor

● Lighting type

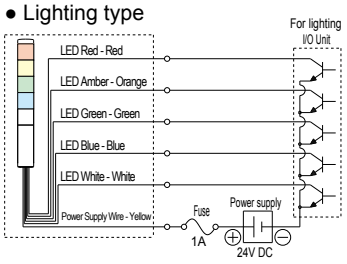


#### 24V DC, PNP type transistor

● Lighting type

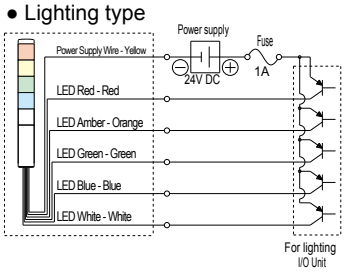


### ■ Transistor Capacity

| Model | Transistor (NPN) |
|---|---|
| Current Capacity | Ic≧50mA |
| Withstand Voltage | Vc≧35V |
| Leakage Current | IL< 0.1mA |

## Optional Parts

For details, see pages 182 to 187.

| Model | Rated Voltage | Sound Level | Power Consumption |
|---|---|---|---|
| MP-B | 24V AC/DC | 80dB (at 1m) | 0.7W |

- Double-insulation for enhanced durability and safety.
- Direct mount installation with just a single screw.
- Main body made of heat resistant ABS resin for superior impact resistance.
- Compatible with the MP and MPS Signal Tower. (The Red module is required when using the optional MP-B)
- Operates in conjunction with the Red LED module. (Alarm activation with other colors must be special ordered)

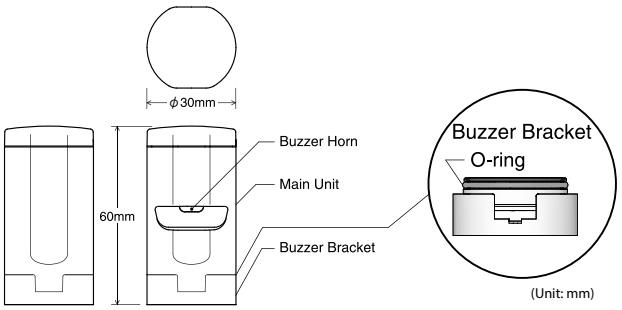


| Optional Parts | Model |
|---|---|
| L Angle | SZL-001 |

# MP-C/MPS-C

Optional MP-B Buzzer

| | |
|---|---|
| Colors | Red, Amber, Green |
| Globe | Polycarbonate resin, high shock resistance and heat resistance |

30mm diameter, slim signal towers featuring corrosion resistant aluminum bodies and an M12 connection.
Hybrid prism-cut lens enhance visibility from any direction and distance

- Direct mounts to a single hole
- Interchangeable modules eliminate the need to rewire
- Sleek and smooth form carrying an IP65 protection rating for dust and water resiliency
- Available Colors: Red, Amber, Green, Blue, Clear/White

Patented reflection system increases visibility.

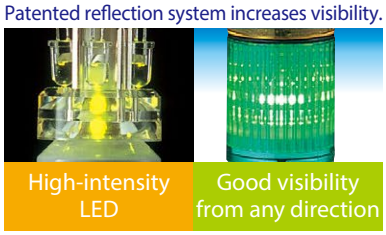


## Specifications

Standard Body

| Stack Number | Model | Rated Voltage | Power Consumption | Mass |
|---|---|---|---|---|
| 1 Tier | **MP-102** | 24V DC | 0.7W | 240g |
| 2 Tiers | **MP-202** | | 1.4W | 260g |
| 3 Tiers | **MP-302** | | 2.0W | 280g |

Short Body

| Stack Number | Model | Rated Voltage | Power Consumption | Mass |
|---|---|---|---|---|
| 1 Tier | **MPS-102C-□+FB247** | 24V DC | 0.7W | 140g |
| 2 Tiers | **MPS-202C-□+FB247** | | 1.4W | 160g |
| 3 Tiers | **MPS-302C-□+FB247** | | 2.0W | 180g |

## Model Code

**MP-302C-□**

Model
MP : Standard Body

Tiers
1~3

Rated Voltage
02: 24V DC

Color
R: Red
Y: Amber
G: Green
(Top to bottom)

Lead Type
Blank : Wire Leads
C : M12 Quick Disconnect

**MPS-302C-□+FB247**

Model
MP : Short Body

Tiers
1~3

Rated Voltage
02: 24V DC

Color
R: Red
Y: Amber
G: Green
(Top to bottom)

Lead Type
C : M12 Quick Disconnect

## Dimensions (Unit:mm)

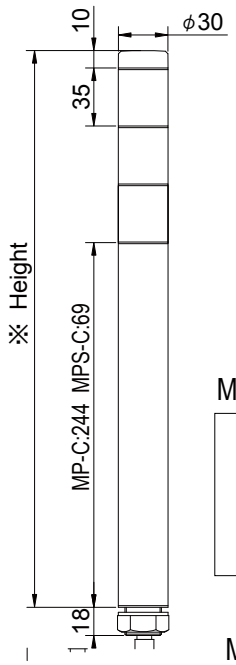


MP-C

※ Height
1 Tier : 289
2 Tiers: 324
3 Tiers: 359

MPS-C

※ Height
1 Tier : 114
2 Tiers: 149
3 Tiers: 184

## Wiring Diagram

External Contact Capacity  Is: Current Capacity  Vs: Withstand Voltage

| | | | |
|---|---|---|---|
| LED Unit (1 Tier) | Current Consumption | Red: 29.0mA Amber: 29.5mA Green: 23.9mA | |
| | Capacity | Is≥50mA | Vs≥35V DC |
| Power Supply | Current Consumption | 200mA | |
| | Capacity | Is≥200mA | Vs≥35V DC |

M12 Connector Pin No.

| Pin No. | LED Unit Color |
|---|---|
| 1 | Green |
| 2 | Red |
| 3 | Common |
| 4 | Amber |

• MP-C M12 Connector

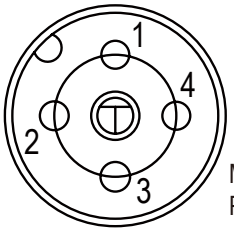


M12 Connector Pin Layout

### Easy to add and remove

• When adding or removing modules, the center shaft that matches the amount of tiers has to be purchased.

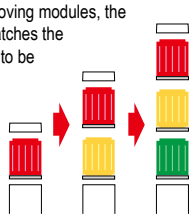

### Interchangeable LED M odules

Changeable color sequence: Easy to add/ remove up to 3 colored modules even after installation.
Note: LED modules of the same color within a signal tower will light up simultaneously.

### Wiring doesn' t chang

• The LED Module colors correspond to the wiring, so re-wiring is not necessary.

## Optional Parts

For details, see pages 182 to 187.

| Model | Rated Voltage | Sound Level | Power Consumption |
|---|---|---|---|
| **MP-B** | 24V AC/DC | 80dB (at 1m) | 0.7W |

- Double-insulation for enhanced durability and safety
- Direct mount installation with just a single screw
- Main body made of heat resistant ABS resin for superior impact resistance
- Compatible with the MP and MPS Signal Tower (The Red module is required when using the optional MP-B)
- Operates in conjunction with the Red LED module (Alarm activation with other colors must be special ordered).

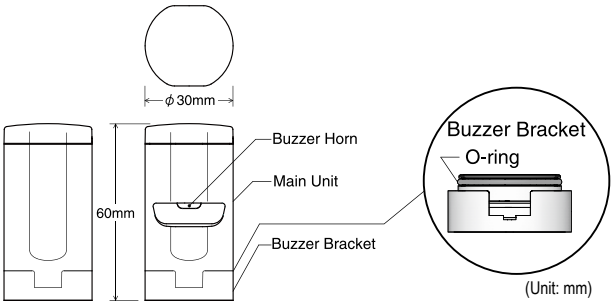

# LS7



| Lighting model | Buzzer model |
|---|---|
| LS7-WH model<br>Lighting (Wire model)<br>LS7-WC model<br>Lighting on (M12 Connector model) | Model LS7-FBWH<br>Lighting / Flashing / Buzzer (2 sounds) (Wire model)<br>Model LS7-BWC<br>Lighting / Buzzer (1 sound) (M12 Connector model) |

Sound pressure 85dB/82dB | IP65 (Buzzer model IP54) | RoHS | UL | CE | 70 ϕ

| | |
|---|---|
| Colors | Red, Amber, Green, Blue, White |
| Globe | Polycarbonate lens with high shock resistance and heat resistance |

The LS7 Series features a sleek, smooth body design ideal for hygienic and sanitary cleaning applications. Models available with an M12 connector.

- IP65 standard; IP54 with audible alarm
- Smooth-surface, polycarbonate, shock resistent body design.
- Audible alarm sound options can be heard above machine noise
- High-contrast LED visibility
- Polycarbonate brackets available

## Specifications

| Model | Number of Luminous Units | Rated Voltage | Mounting Method | Rated Current Consumption | Maximum Current Consumption | Maximum sound pressure | Operation Temperature Range | Protection Rating | Mass (±10%) | Body Color |
|---|---|---|---|---|---|---|---|---|---|---|
| **LS7-302** | 3 | 24V DC (±10%) | Direct Mounting (Indoors Only) | Red: 20mA<br>Amber, Green, Blue, White: 30mA<br>Buzzer: 30mA | Red: 35mA<br>Amber Green, Blue, White: 40mA<br>Buzzer: 55mA | Buzzer 1, approximately 82dB, Wire model (Fast Intermittent) M12 connector model (Continuous beep)<br>Buzzer 2, approximately 85dB, Wire model (Fast Alternating Intermittent) M12 connector model (No Buzzer) | -30℃ - 60℃ | Lighting model IP65<br>Buzzer model IP54 | With buzzer: 0.26kg | Off-white (Blank)<br>Off-darkgray (D)<br>Silver (S) |
| **LS7-502** | 5 | | | | | | | | Without buzzer: 0.35kg | Off-white (Blank)<br>Off-darkgray (D)<br>Silver (S) |

## Model Code

**LS7-502SFBWH-RYGBC**

Model

Number of tiers

Rated Voltage

| | |
|---|---|
| 02 | 24V AC/DC |

Body Color

| | |
|---|---|
| Blank | Off-white |
| D | Dark Gray |
| S | Silver |

Specifications

| | |
|---|---|
| Blank | Lighting only |
| FB | Lighting / Flashing / Buzzer (Wire model only) |
| B | Lighting / Buzzer (M12 Connector model only) |

* F Lighting / Flashing model has H wire only.
* For C (M12 Connector model), the buzzer sound is continuous.

Input Specifications

| | |
|---|---|
| C | M12 connector |
| H | Wire |

Colors

| | |
|---|---|
| RYGNN | Red, Amber, Green |
| RYGBC | Red, Amber, Green, Blue, White |

From Top to Bottom
* Luminous Colors are fixed.

### Example: LS7-302WC-RYGNN

- Body color:Off-white
- Buzzer availability:not available
- LED Color:Red Amber Green (none) (none)
- Illumination specification - Lighting only
- Input specification M12 connector

## Optional Parts

For details, see pages 182 to 187.

| Optional Parts | Model |
|---|---|
| Platform Bracket (Off-white) | **Model SZ-100** |
| Platform Bracket (Off-darkgray) | **Model SZ-100D** |
| Platform Bracket (Silver) | **Model SZ-100S** |
| Wallmount Bracket (Off-white) | **Model SZ-110** |
| Wallmount Bracket (Off-darkgray) | **Model SZ-110D** |
| Wallmount Bracket (Silver) | **Model SZ-110S** |
| Multi-mount Bracket (Off-white) | **Model SZ-130** |
| Multi-mount Bracket (Off-darkgray) | **Model SZ-130D** |
| Multi-mount Bracket (silver) | **Model SZ-130S** |
| Connector with cable, cable length 2m (Omron model) | **SZ-120-02 (XS2F-D821-DH0-R)** |
| Connector with cable, cable length 5m (Omron model) | **SZ-120-05 (XS2F-D821-GH0-R)** |
| Connector with cable, cable length 10m (Omron model) | **SZ-120-10 (XS2F-D821-JH0-R)** |

## Dimensions (mm)

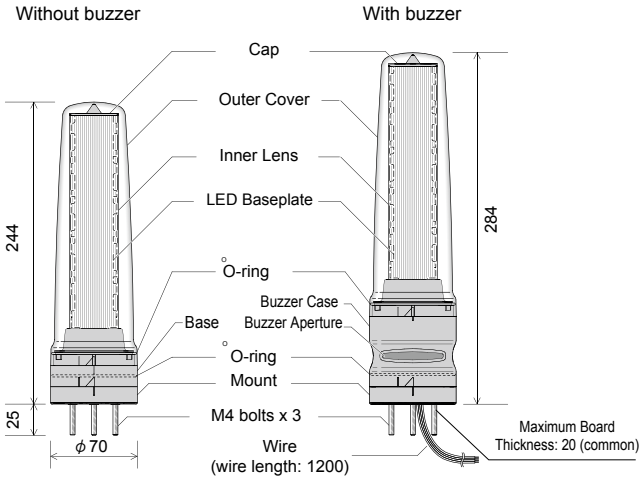


### Installation Dimension Drawings

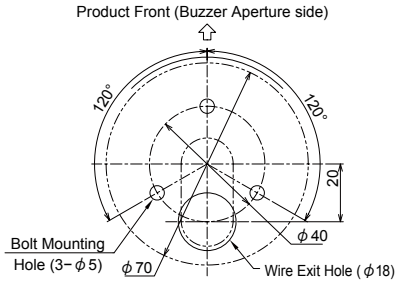


## Wiring Diagram

### LS7-☐☐2☐ (WH) (WC) (BWC) model

■ Without Lighting / Audible, B. Audible available

Contact Relay  Model: LS7-502☐(B)W☐

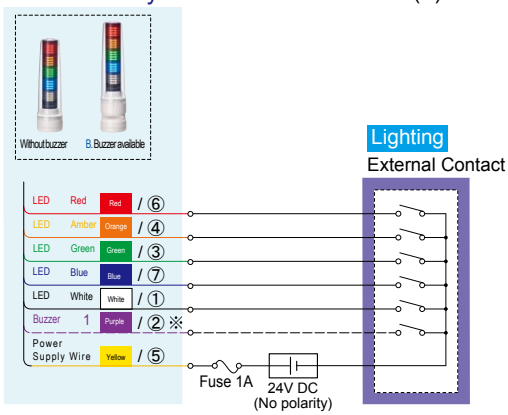


* Only products with audible available

Example) BWC model

| | Tone | Sound pressure |
|---|---|---|
| Audible 1 (Purple) | Continuous Beep | 70dB - 82dB |

PLC (NPN transistor)

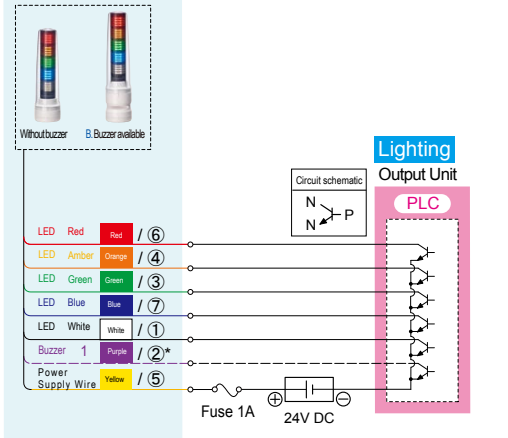


* Only products with audible available

PLC (PNP transistor)

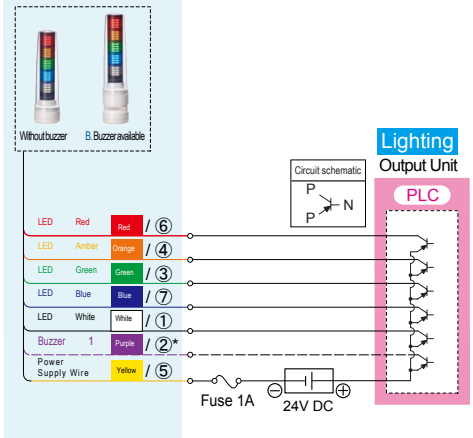


* Only products with audible available

## [LS7-☐☐2☐FBWH model]

### ■ F. Lighting / Flashing. B. Audible available  Model: LS7-502□FBWH

Contact Relay

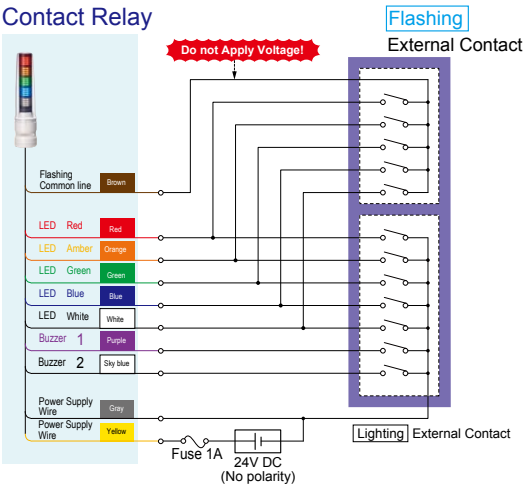


Example)  FBWH model

| | Tone | Sound pressure |
|---|---|---|
| Audible 1 (Purple) | Fast Intermittent | 70dB - 82dB |
| Audible 2 (Sky bule) | Fast Alternating Intermittent | 70dB - 85dB |

PLC (NPN transistor)

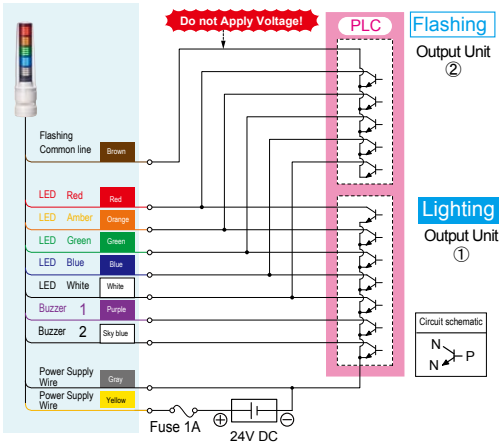


PLC (PNP transistor)

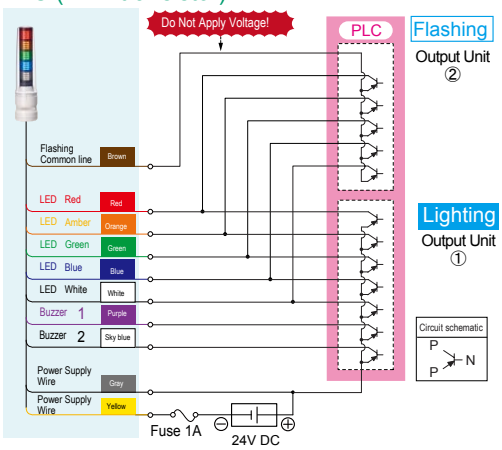


Note: To turn on the lamp and flash the lamp, you need to prepare two separate output units for turning the lamp on and for flashing the lamp.

M12 Connector Pin Arrangement

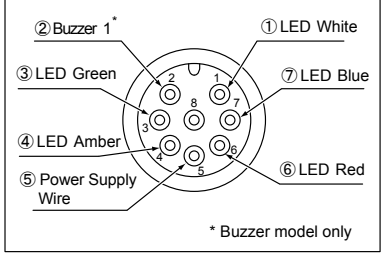


External Contact specifications

■ Contact Relay (switch)

| Rated Load Voltage | Rated Amperes | |
|---|---|---|
| | LED | Buzzer |
| 24V DC | 100mA or more per tier | 200mA or higher |

■ PLC Output Unit

| Rated Load Voltage | Rated Amperes | | Leakage Current |
|---|---|---|---|
| | LED | Buzzer | |
| 24V DC | 100mA or more per tier | 200mA or higher | 0.1mA or less |

# LGE



LGE model (Lighting)
LGE-FB model (Lighting / Flashing / Buzzer)

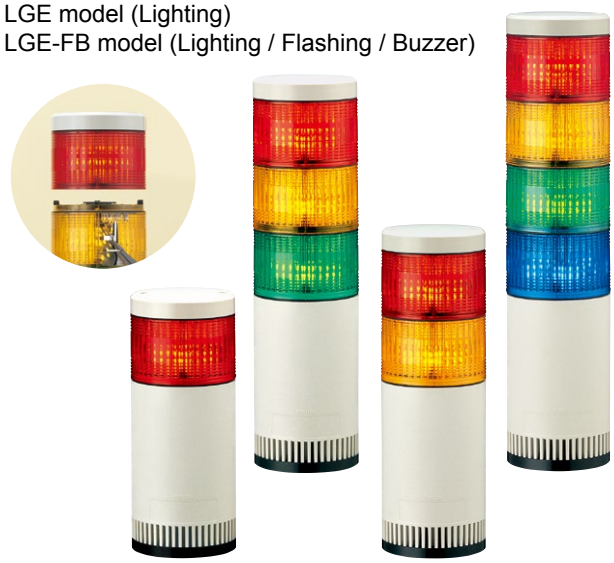

Sound pressure 85dB | IP54 | CE (24V model only) | 100 φ

| | |
|---|---|
| Colors | Red, Amber, Green, Blue, White |
| Globe | Polycarbonate lens with high shock resistance and heat resistance |

The LGE Series features a modular design and 100mm diameter with enhanced visibility; suitable for larger machines.

- Up to 5 LED units with a built-in 85dB audible alarm
- Triple reflection lens design for enhanced visibility from multiple angles
- Direct mount or pole mount options
- No need to rewire when rearranging or adding LED units
- Open collector supported

● Standard Colors:
1-Tier model / Red (-R), Amber (-Y), Green (-G)
2-Tier model / Red-Amber (-RY)
3-Tier model / Red-Amber-Green (-RYG)
4-Tier model / Red-Amber-Green-Blue (-RYGB)

## Specifications

| Without audible | | | | |
|---|---|---|---|---|
| Model | Rated Voltage | Number of tiers | Power Consumption | Mass |
| **LGE-102** | 24V AC/DC | 1 | 2.0W | 0.4kg |
| **LGE-202** | | 2 | 4.0W | 0.6kg |
| **LGE-302** | | 3 | 6.0W | 0.8kg |
| **LGE-402** | | 4 | 8.0W | 0.9kg |
| **LGE-110** | 100V AC | 1 | 5.2W | 1.0kg |
| **LGE-210** | | 2 | 7.7W | 1.2kg |
| **LGE-310** | | 3 | 10.2W | 1.4kg |
| **LGE-410** | | 4 | 12.7W | 1.5kg |
| **LGE-120** | 220 - 240V AC | 1 | 5.2W | 1.0kg |
| **LGE-220** | | 2 | 7.7W | 1.2kg |
| **LGE-320** | | 3 | 10.2W | 1.4kg |
| **LGE-420** | | 4 | 12.7W | 1.5kg |

| Flashing, with audible (Flashing frequency approximately 60/minute) | | | | |
|---|---|---|---|---|
| Model | Rated Voltage | Number of tiers | Power Consumption | Mass |
| **LGE-102FB** | 24V AC/DC | 1 | 2.5W | 0.4kg |
| **LGE-202FB** | | 2 | 4.5W | 0.6kg |
| **LGE-302FB** | | 3 | 6.5W | 0.8kg |
| **LGE-402FB** | | 4 | 8.5W | 0.9kg |
| **LGE-110FB** | 100V AC | 1 | 5.7W | 1.0kg |
| **LGE-210FB** | | 2 | 8.2W | 1.2kg |
| **LGE-310FB** | | 3 | 10.7W | 1.4kg |
| **LGE-410FB** | | 4 | 13.2W | 1.5kg |
| **LGE-120FB** | 220 - 240V AC | 1 | 5.7W | 1.0kg |
| **LGE-220FB** | | 2 | 8.2W | 1.2kg |
| **LGE-320FB** | | 3 | 10.7W | 1.4kg |
| **LGE-420FB** | | 4 | 13.2W | 1.5kg |

● The price for 1 to 3 tier models are for Red, Amber, and Green only.
● The price for 4 tier model is for Red, Amber, and Green, plus Blue and White only.
● If you want to use Blue and White instead of Red, Amber, and Green, there is an additional cost per unit.

### ■ Replacement Parts for Changing Colors

| Replacement Parts | Part Number |
|---|---|
| Red LED Unit | B32100004-1F1 |
| Amber LED Unit | B32100004-2F1 |
| Green LED Unit | B32100004-3F1 |
| Blue LED Unit | B32100004-4F1 |
| White LED Unit | B32100004-7F1 |

| Replacement Parts | Part Number |
|---|---|
| Shaft for 1 tier | B62910028-1F1 |
| Shaft for 2 tiers | B62910028-2F1 |
| Shaft for 3 tiers | B62910028-3F1 |
| Shaft for 4 tiers | B62910028-4F1 |

## Optional Parts

For details, see pages 182 to 187.

| Optional Parts | Model |
|---|---|
| Wallmount Bracket | SZ-008 |
| Wallmount Bracket | SZ-023 |

* When using SZ-008 or SZ-023, the cord exits from the side.

## Model Code

# LGE-402FB-RYGB

Model
Number of tiers
Rated Voltage

| | |
|---|---|
| 02 | 24V AC/DC |
| 10 | 100V AC |
| 20 | 220V AC |

Colors

| | |
|---|---|
| R | Red |
| Y | Amber |
| G | Green |
| B | Blue |
| C | White |

From Top to Bottom

Specifications

| | |
|---|---|
| Blank | Lighting |
| FB | Lighting / Flashing / Buzzer |

## Dimensions (mm)

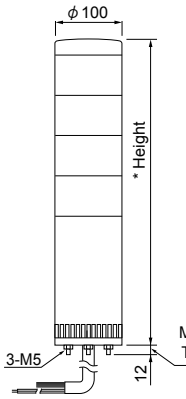


* Height
1 tier: 243.9
2 tiers: 305.4
3 tiers: 366.9
4 tiers: 428.4

### Installation Dimension Drawings

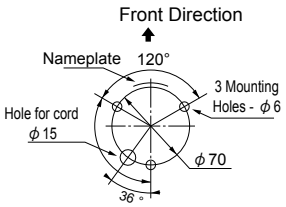


Nominal Cross-sectional Area; Wire Type: Wire Length
Power Supply Wire 0.75mm²: CKVV: 450
Signal Wire 0.3mm²: CKVV: 400

## Wiring Diagram

### [LGE-☐☐☐(FB) model]

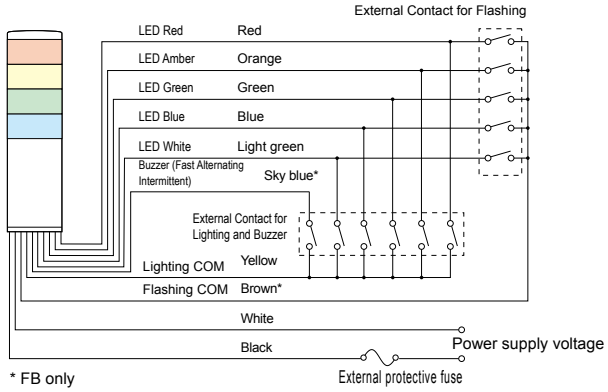


- For FB models, avoid simultaneous Lighting and Flashing inputs to a tier from an external contact as it may illuminate other tiers.
- Please note that the FB model requires 2 common signal lines on the PC output unit, for lighting and flashing.
- Do not connect the buzzer line to the Flashing COM. Otherwise the sound will not be intermittent and the tone quality will be poor.
- For safety, please make sure you have an external protective fuse in place.
- For Signal Light wiring, Lighting signal takes precedence over Flashing.

■ Signal Wire Voltage and Current per tier

| Voltage | Signal Wire Voltage | LGE model | | |
|---|---|---|---|---|
| | | LED | Buzzer | |
| | | Signal Wire Current | Signal Wire Current | Inrush Current |
| 24V AC/DC | 24V AC/DC | 90mA | 20mA | 250mA |
| 100V AC | 24V AC | | | |
| 220V AC | | | | |

* Set aside ample capacity for the external contact, considering the Signal Wire Current and Inrush Current.

### 24V DC Example: NPN (PNP) Transistor Driver

#### When controlled by NPN Transistor

● LGE model

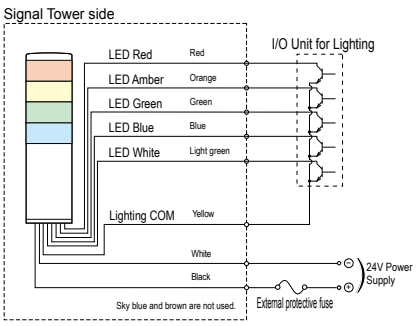


● LGE-FB model

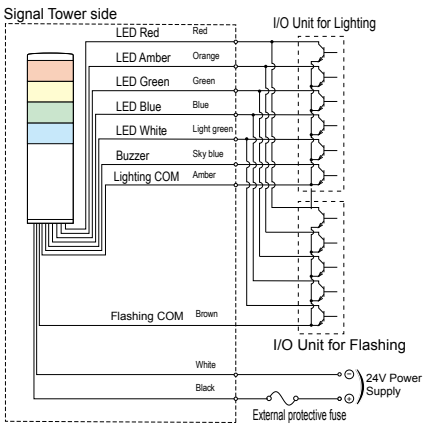


#### When controlled by PNP Transistor

● LGE model

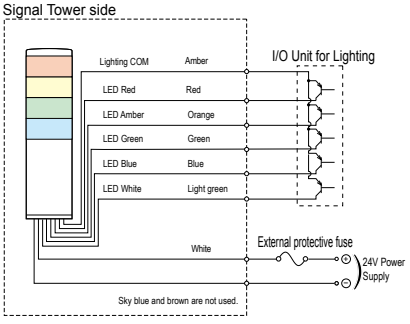


● LGE-FB model

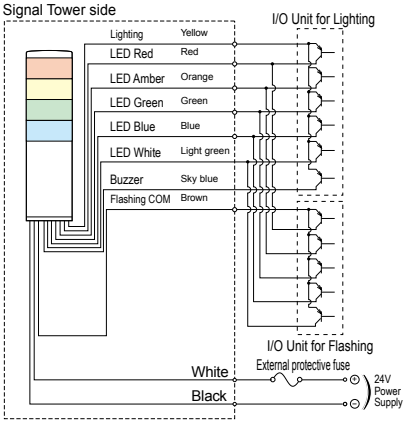


■ Internal Fuse Capacity

| | |
|---|---|
| Type | LGE |
| Voltage | All Specifications |
| Model | Miniature Glass Tube Fuse |
| Dimensions | ϕ5 x 20mm |
| Rated Current | 1A |

■ Transistor Capacity (NPN/PNP)

| | |
|---|---|
| Model | LGE |
| Current Capacity | Ic≧0.1A (Lights)<br>Ic≧0.3A (Buzzer) |
| Withstand Voltage | Vc≧35V |

# WEP/WE



**Light-gray body**

WEP model (Lighting)
WEP-FB model (Lighting / Flashing / Audible)

**Chrome-plated body**

WE model (Lighting)
WE-FB model (Lighting / Flashing / Audible)

Sound pressure 90dB | IP65 (IP54 for FB model) | RoHS | UL | CE | W90 x D37.5

| | |
|---|---|
| Colors | Red, Amber, Green, Blue, White |
| Globe | Polycarbonate lens with high shock resistance and heat resistance |

The WEP/WE Series features an ultra-slim, 37.5mm depth, half-moon profile, and 5 LED units for effective signaling without adding additional bulk to the hosting equipment.

- Clear, vertically cut lenses for wider light distribution
- Built-in audible alarm with up to 90dB (FB type)
- Can be installed vertically or horizontally
- Available in chrome plated (WE) or ivory white (WEP) body styles
- NPN/PNP compatible (24V DC ONLY)
- IP65 - dust and water resistant (IP54 for FB type)

● Standard Colors:
3-Tier model / Red-Amber-Green (-RYG), Red-Amber-Blue (-RYB), Red-Amber-White (-RYC)
4-Tier model / Red-Amber-Green-Blue (-RYGB), Red-Amber-Green-White (-RYGC)
5-Tier model / Red-Amber-Green-Blue-White (-RYGBC)
* This Uses clear globes; the globe is clear when the light is off.

## Specifications

| Without buzzer | | | | | |
|---|---|---|---|---|---|
| | Model | Rated Voltage | Number of tiers | Power Consumption | Mass |
| Light-gray model | **WEP-302** | 24V AC/DC | 3 | 1.7W | 0.26kg |
| | **WEP-402** | | 4 | 2.0W | 0.31kg |
| | **WEP-502** | | 5 | 2.7W | 0.31kg |
| Chromium-plated model | **WE-302** | 24V AC/DC | 3 | 1.7W | 0.26kg |
| | **WE-402** | | 4 | 2.0W | 0.31kg |
| | **WE-502** | | 5 | 2.7W | 0.31kg |

| Flashing, with buzzer (Flashing frequency approximately 60/minute) | | | | | |
|---|---|---|---|---|---|
| | Model | Rated Voltage | Number of tiers | Power Consumption | Mass |
| Light-gray model | **WEP-302FB** | 24V AC/DC | 3 | 2.7W | 0.30kg |
| | **WEP-402FB** | | 4 | 3.2W | 0.35kg |
| | **WEP-502FB** | | 5 | 3.7W | 0.35kg |
| Chromium-plated model | **WE-302FB** | 24V AC/DC | 3 | 2.7W | 0.30kg |
| | **WE-402FB** | | 4 | 3.2W | 0.35kg |
| | **WE-502FB** | | 5 | 3.7W | 0.35kg |

## Model Code

**WEP-502FB-RYGBC**

Model

| | |
|---|---|
| WE | Chrome-plated model |
| WEP | Light-gray model |

Number of tiers

Rated Voltage

| | |
|---|---|
| 02 | 24V AC/DC |

Specifications

| | |
|---|---|
| Blank | Lighting |
| FB | Lighting / Flashing / Audible |

Colors (From Top to Bottom)

| | |
|---|---|
| R | Red |
| Y | Amber |
| G | Green |
| B | Blue |
| C | White |

## Dimensions (mm)

Installation Dimension Drawings

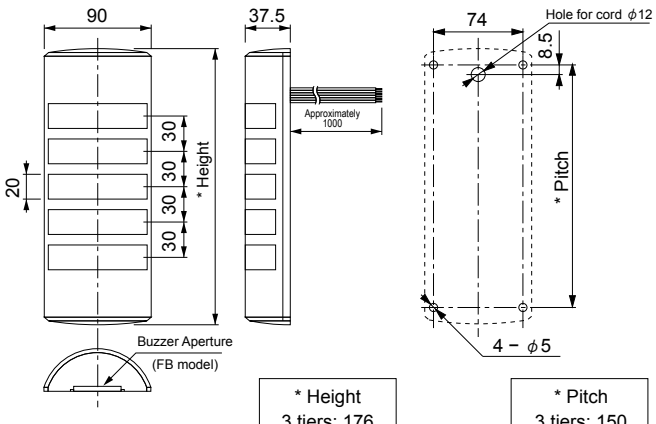


* To maintain IP54 for FB model, install the unit with the buzzer aperture pointing down.

| * Height | |
|---|---|
| 3 tiers: | 176 |
| 4 tiers: | 206 |
| 5 tiers: | 236 |

| * Pitch | |
|---|---|
| 3 tiers: | 150 |
| 4 tiers: | 180 |
| 5 tiers: | 210 |

Nominal Cross-sectional Area; Wire Type: Wire Length
0.3mm2: UL1007: 1000

# Wiring Diagram

## [WEP-☐☐☐(FB) model] / [WE-☐☐☐(FB) model]

● Lighting type

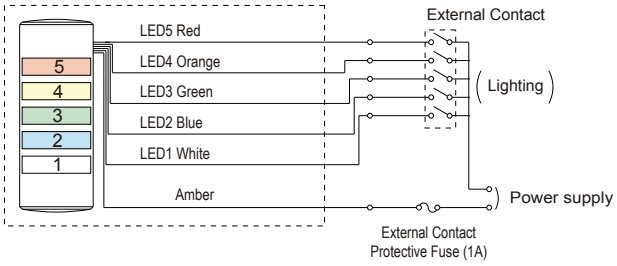


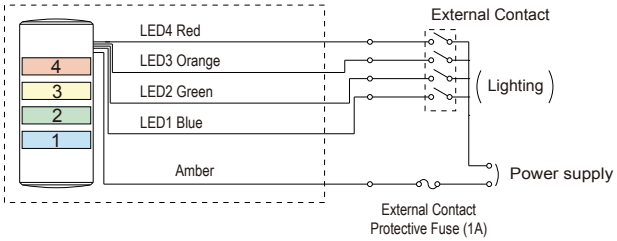


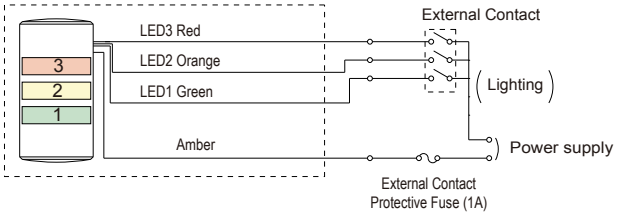


● Flashing type

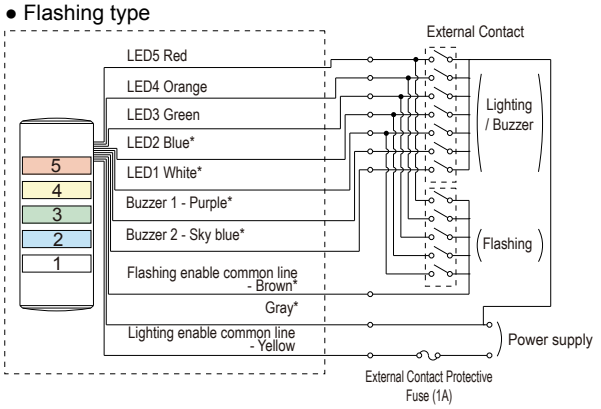


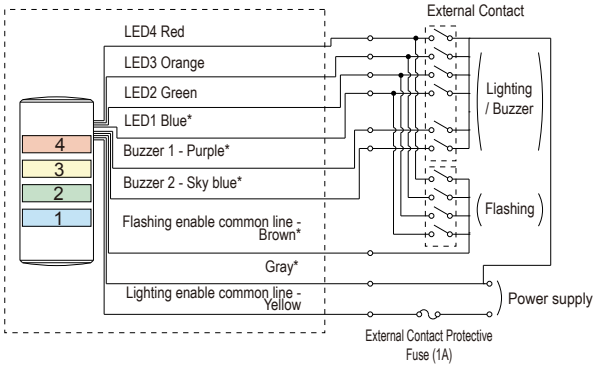


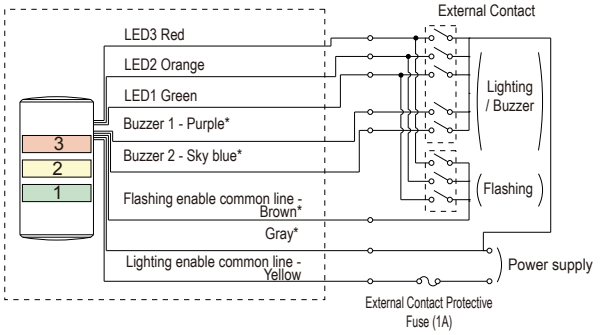


## ■ Signal Wire Color List

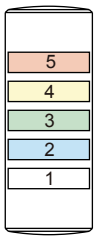


5-Tier model

| | Wire Color |
|---|---|
| 5 | Red |
| 4 | Orange |
| 3 | Green |
| 2 | Blue |
| 1 | White |

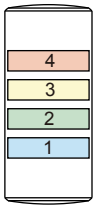


4-Tier model

| | Wire Color |
|---|---|
| 4 | Red |
| 3 | Orange |
| 2 | Green |
| 1 | Blue |

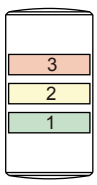


3-Tier model

| | Wire Color |
|---|---|
| 3 | Red |
| 2 | Orange |
| 1 | Green |

## ■ Audible

| | Wire Color | Type of Sound |
|---|---|---|
| None | — | — |
| Audible 1 | Purple - Signal Wire | Fast Intermittent |
| Audible 2 | Sky blue - Signal Wire | Slow Intermittent |

## ■ Signal Wire Voltage and Current per tier

| Model | Voltage | Signal Wire Voltage | LED | | Audible | |
|---|---|---|---|---|---|---|
| | | | Signal Wire Current | | Signal Wire Current | Inrush Current |
| | | | Red, Amber | Green, Blue, White | | |
| **WEP/WE** | 24V AC/DC | 24V AC/DC | 24.0mA | 14.3mA | 40mA | 250mA |

* Set aside ample capacity for the external contact, considering the Signal Wire Current and Inrush Current.

- For FB models, avoid simultaneous Lighting and Flashing inputs to a tier from an external contact as it may illuminate other tiers.
- Please note that the FB model requires 2 common signal lines on the PC output unit, for lighting and flashing.
- For safety, please make sure you have an external protective fuse in place.
- A malfunction may occur if you connect multiple units serially. Please control each unit with a separate contact.

* For non-FB mode, there is no sky blue, purple, gray, and brown lead lines.

## 24V DC Example: NPN (PNP) Transistor Driver

### NPN transistor

● Lighting type

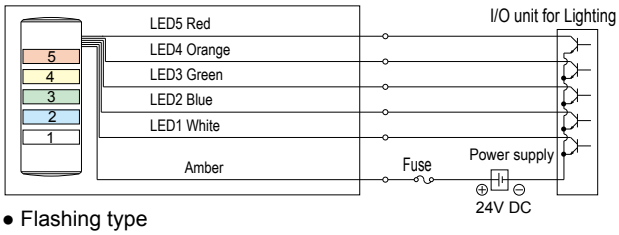


● Flashing type

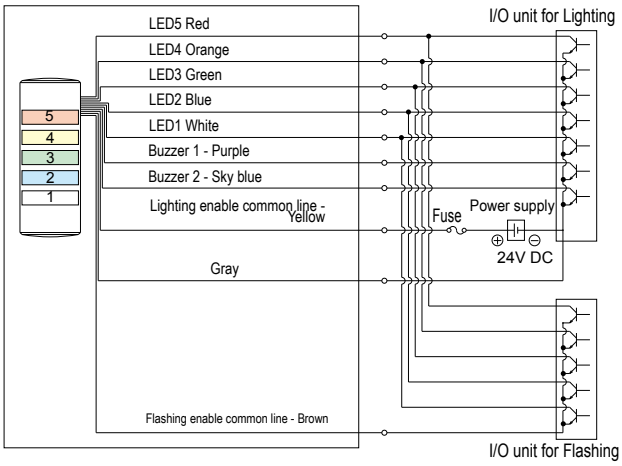


### PNP transistor

● Lighting type

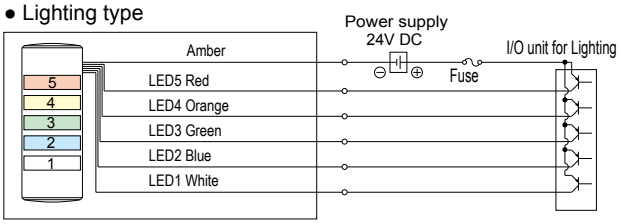


● Flashing type

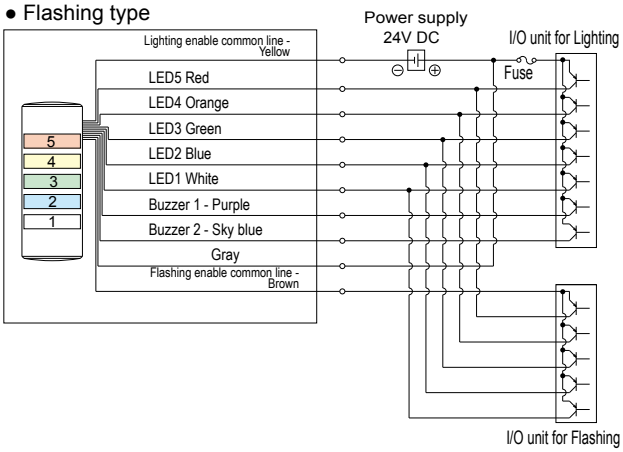


| Model | **Transistor (NPN or PNP)** | Withstand Voltage | Vc≧35V |
|---|---|---|---|
| Current Capacity | Ic≧0.1A, Buzzer 300mA or more | Leakage Current | IL≦1mA |

### ■ External contact protective fuse

| Voltage | Rated Fuse Current |
|---|---|
| All Voltages | 1A |

Flush-Mounted LED Signal Tower

# WME-D

WME-D model, Lighting WME-DFB model (Lighting / Flashing / Buzzer)

- Standard Colors:
  1-Tier model / Red (-R), Amber (-Y), Green (-G)
  2-Tier model / Red-Amber (-RY)
  3-Tier model / Red-Amber-Green (-RYG)
  4-Tier model / Red-Amber-Green-Blue (-RYGB)
  5-Tier model / Red-Amber-Green-Blue-White (-RYGBC)

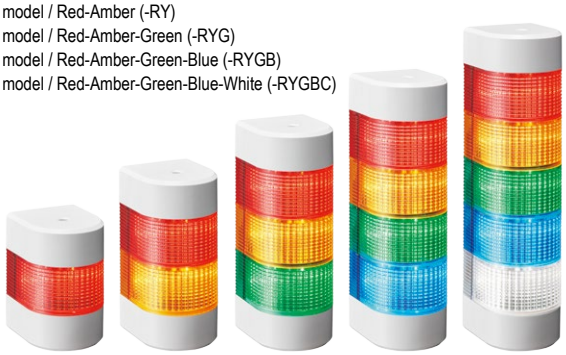

Sound pressure 93dB | IP54 | RoHS | UL | CE | W70 x D80

| | |
|---|---|
| Colors | Red, Amber, Green, Blue, White |
| Globe | Polycarbonate resin, high shock resistance and heat resistance |

The WME Series features an 80mm diameter modular design, up to 5 ultra-bright LED units, and a 93dB audible alarm for effective signaling and enhanced durability.

· Next generation LR Series illumination and modularity technology
· Built-in audible alarm with up to 93dB
· Can be installed vertically or horizontally
· Easy to install with included metal fittings
· NPN/PNP compatible (NPN only for AC models)
· IP65 rating - dust and water resistant (IP54 for FB type)

## Specifications

| Without buzzer | | | | |
|---|---|---|---|---|
| Model | Rated Voltage | Number of tiers | Power Consumption | Mass |
| **WME-102D** | 24V DC | 1 | 0.9W | 0.28kg |
| **WME-202D** | | 2 | 1.8W | 0.37kg |
| **WME-302D** | | 3 | 2.7W | 0.46kg |
| **WME-402D** | | 4 | 3.6W | 0.55kg |
| **WME-502D** | | 5 | 4.5W | 0.64kg |
| **WME-1M2D** | 100 - 240V AC | 1 | 1.6W | 0.35kg |
| **WME-2M2D** | | 2 | 2.9W | 0.44kg |
| **WME-3M2D** | | 3 | 4.2W | 0.53kg |
| **WME-4M2D** | | 4 | 5.5W | 0.62kg |
| **WME-5M2D** | | 5 | 6.8W | 0.71kg |

| Flashing, with buzzer (Flashing frequency approximately 60/minute) | | | | |
|---|---|---|---|---|
| Model | Rated Voltage | Number of tiers | Power Consumption | Mass |
| **WME-102DFB** | 24V DC | 1 | 2.1W | 0.28kg |
| **WME-202DFB** | | 2 | 3.0W | 0.37kg |
| **WME-302DFB** | | 3 | 3.9W | 0.46kg |
| **WME-402DFB** | | 4 | 4.8W | 0.55kg |
| **WME-502DFB** | | 5 | 5.7W | 0.64kg |
| **WME-1M2DFB** | 100 - 240V AC | 1 | 2.8W | 0.35kg |
| **WME-2M2DFB** | | 2 | 4.1W | 0.44kg |
| **WME-3M2DFB** | | 3 | 5.4W | 0.53kg |
| **WME-4M2DFB** | | 4 | 6.7W | 0.62kg |
| **WME-5M2DFB** | | 5 | 8.0W | 0.71kg |

- You can order custom color combinations from one unit. Contact us for the lead time on custom orders.
- Custom orders with multiple units in the same color – Green (G), Blue (B), or White (C) – an additional cost per unit is added.

### ■ Replacement Parts for Changing Colors

| Replacement Parts | Part Number |
|---|---|
| Red LED Unit | B72100259-1F1* |
| Amber LED Unit | B72100259-2F1* |
| Green LED Unit | B72100259-3F1* |
| Blue LED Unit | B72100259-4F1* |
| White LED Unit | B72100259-7F1* |
| Shaft for 1 tier | S33552120-0455F1 |
| Shaft for 2 tiers | S33552120-04100F1 |
| Shaft for 3 tiers | S33552120-04140F1 |

| Replacement Parts | Part Number |
|---|---|
| Shaft for 4 tiers | S33552120-04180F1 |
| Shaft for 5 tiers | S33552120-04220F1 |
| Metal Fitting for 1 tier | B85130021-5F1 |
| Metal Fitting for 2 tiers | B85130021-4F1 |
| Metal Fitting for 3 tiers | B85130021-3F1 |
| Metal Fitting for 4 tiers | B85130021-2F1 |
| Metal Fitting for 5 tiers | B85130021-1F1 |
| Head Cover | B32310085-F1* |

* LED Units and head cover for WME-A Series cannot be used with this product.

## Model Code

**WME-502DFB-RYGBC**

- Model
- Number of tiers
- Rated Voltage: 02 = 24V DC; M2 = 100 - 240V AC
- Specifications: Blank = Lighting; FB = Lighting/ Flashing / Buzzer
- Colors (From Top to Bottom): R = Red; Y = Amber; G = Green; B = Blue; C = White

## Dimensions (mm)

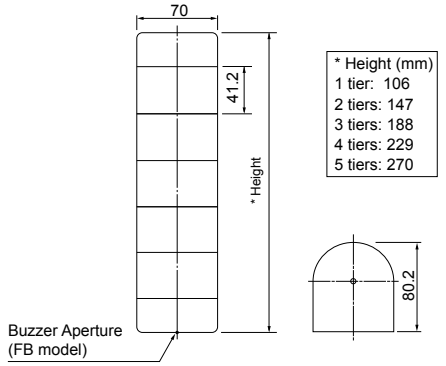


* Height (mm)
1 tier: 106
2 tiers: 147
3 tiers: 188
4 tiers: 229
5 tiers: 270

Installation Dimension Drawings

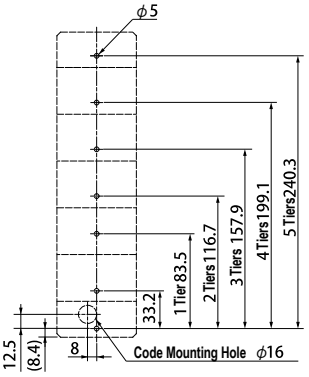


| | Nominal Cross-sectional Area | Wire Type | Wire Length |
|---|---|---|---|
| Power Supply Wire | 0.2mm2 | UL1061 | 1100 |
| Signal Wire | 0.2mm2 | UL1061 | 1100 |

(M2 Type)

| | Nominal Cross-sectional Area | Wire Type | Wire Length |
|---|---|---|---|
| Power Supply Wire | 0.8mm² | UL1015 | 1100 |
| Signal Wire | 0.2mm² | UL1061 | 1100 |

* To maintain IP54 for FB model, install the unit with the buzzer aperture pointing down.
* A special metal fitting for each tier model is included

# Wiring Diagram

## [WME-☐☐☐D(FB) model]

● 24V DC

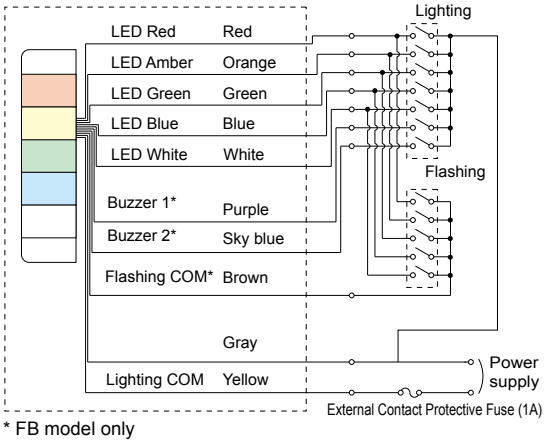


* FB model only

●100 - 240V AC

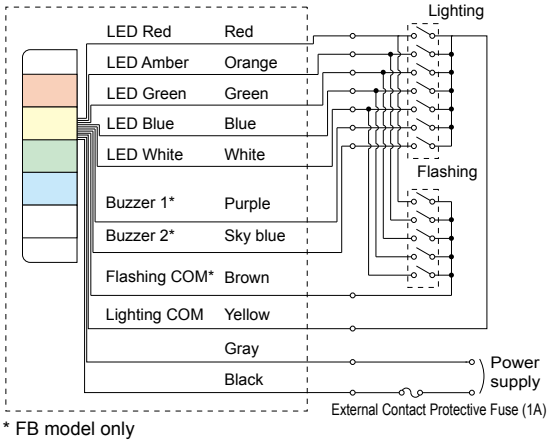


* FB model only

## ■ Signal Wire Voltage and Current per tier

| Model | Voltage | Signal Wire Voltage | LED | | | | | Audible | |
|---|---|---|---|---|---|---|---|---|---|
| | | | Signal Wire Current | | | | | Signal Wire Current | Inrush Current |
| | | | Red | Amber | Green | Blue | White | | |
| **WME-D** | 24V DC | 24V DC | 22 mA | 26 mA | 15 mA | 29mA | | 40mA | 100mA |
| | 100 - 240V AC | | | | | | | | None |

- For FB models, avoid simultaneous Lighting and Flashing inputs to a tier from an external contact as it may illuminate other tiers.
- Please note that the FB model requires 2 common signal lines on the PC output unit, for lighting and flashing.
- For safety, please make sure you have an external contact protective fuse in place.

## Wiring Examples: NPN (PNP) Transistor Driver

### 24V DC, NPN type transistor

● Flashing model

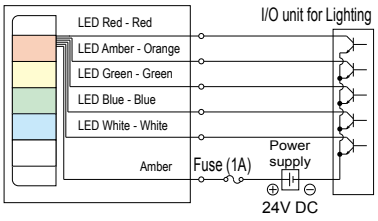


● Lighting / Flashing / Audible model

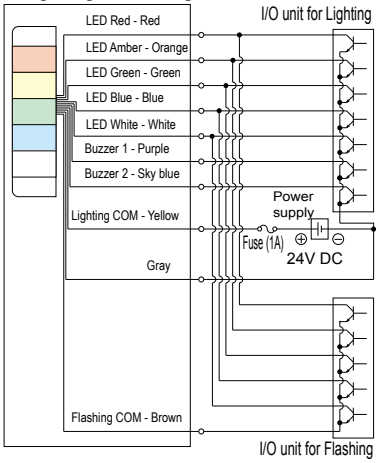


### 24V DC, PNP type transistor

● Flashing model

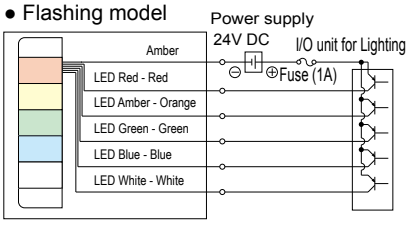


● Lighting / Flashing / Audible model

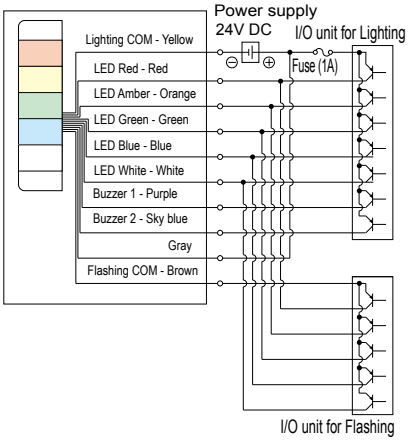


### 100 - 240V AC, NPN type transistor

● Flashing model

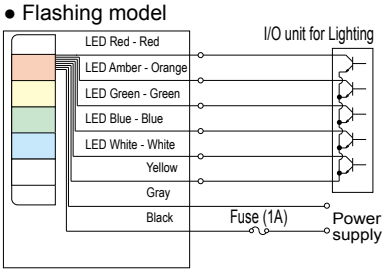


● Lighting / Flashing / Audible model

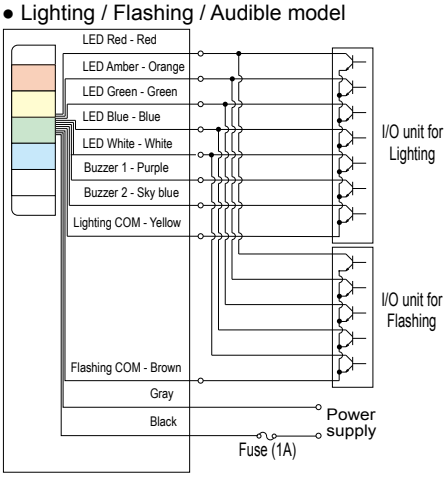


| Model | **Transistor (NPN or PNP)** | Withstand Voltage | Vc≧35V |
|---|---|---|---|
| Current Capacity | Ic ≧ 100mA (LED Units)<br>Ic≧300mA (Buzzer) | Leakage Current | IL≦0.1mA |

# KUS



Signal Units
KUS-EA model (LED Unit)
KUS-S model (Incandescent Bulb Unit)
KUS-B model (Buzzer Unit)

Base Unit
KUS model (Lighting)
KUS-F model (Lighting / Flashing)
KUS-C model (Lighting, supports Open Collector)
KUS-FC model (Lighting / Flashing, supports Open Collector)

| | |
|---|---|
| Colors | EA type: Red, Amber, Green, Blue, White. S type: Red, Amber, Green, Blue, Clear |
| Globe | Polycarbonate resin, high shock resistance and heat resistance |

Sound pressure 80dB (When using 24V base unit 70dB) | IP54 | RoHS (KUS-24(F) and KUS-EA only) | 70mm

The KUS Series features a 70mm diameter modular design, up to 4 LED or incandescent bulb units, and an optional 80dB audible alarm for effective, flexible signaling.

- Up to 4 light and audible alarm modules
· Each light module has a built-in DIP switch to toggle 'on' and 'off' for easy reconfiguration
· Maximum operating capacity of base unit is 21 watts
- Optional 80dB audible alarm module
- NPN/PNP compatible. Open collector outputs on KUS-FC, C, F models.

## Specifications

(Flashing Rate - 60/minute)

### KUS Base Unit Specifications

| Function | Model | Rated Voltage | Power Consumption |
|---|---|---|---|
| Lighting | **KUS-24** | 24V AC/DC | Maximum 21W |
| | **KUS-100** | 100V AC | |
| | **KUS-220** | 220V AC | |
| Lighting / Flashing | **KUS-24F** | 24V AC/DC | |
| | **KUS-100F** | 100V AC | |
| | **KUS-220F** | 220V AC | |
| Open Collector Lighting | **KUS-24C** | 24V AC/DC | |
| | **KUS-100C** | 100V AC | |
| | **KUS-220C** | 220V AC | |
| Open Collector Lighting / Flashing | **KUS-24FC** | 24V AC/DC | |
| | **KUS-100FC** | 100V AC | |
| | **KUS-220FC** | 220V AC | |

* When ordering, please specify Signal Units, Buzzer Unit, and Base Unit (Power Supply Unit).

### Signal Unit Specifications

| Model | Power Consumption | Bulb | Number |
|---|---|---|---|
| **KUS-S (Incandescent Bulb)** | 6W | 24V 6W | 19 |
| **KUS-EA (LED) -R/-Y/-G** | R,Y: 1.2W / G, B, C: 0.9W | ——— | ——— |
| **KUS-EA(LED) -B/-C** | | | |

Bulb Shape . . . Glass Bulb G14, Base BA9S
● For light bulb part number for each model, see "Light Bulb Options" at the end of this catalog.
● The base unit supplies power.

### Buzzer Unit Specifications

| Model | Power Consumption | Sound Pressure |
|---|---|---|
| **KUS-B** | 0.5W | 80dB (at a distance of 1m)* |

* 70dB at a distance of 1m when using 24V AC/DC base unit
● Signal Units and Base Units are interchangeable, regardless of power supply voltage.
● The base unit supplies power.

## Optional Parts

For details, see pages 182 to 187.

| Optional Parts | Model |
|---|---|
| Mounting Pole | SZ-40L |
| Mounting Pole | SZ-40T |
| Wallmount Bracket | SZ-007 |

## Dimensions (mm)

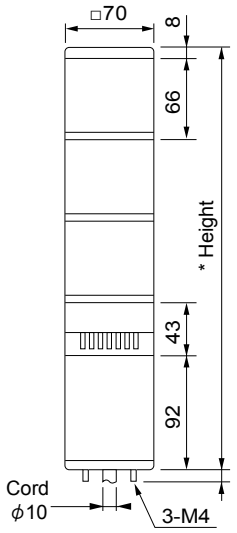


| * Height (mm) |
|---|
| 1 tier: 166 |
| 2 tiers: 232 |
| 3 tiers: 298 |
| 4 tiers: 364 |

43 mm higher with Buzzer Unit attached.
(You cannot set up a Buzzer Unit with 4 tiers)

Installation Dimension Drawings

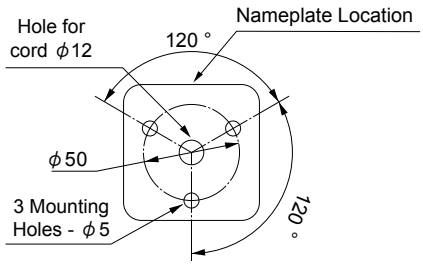


## Wiring Diagram

### Contact Input model Base Unit (KUS, KUS-F)

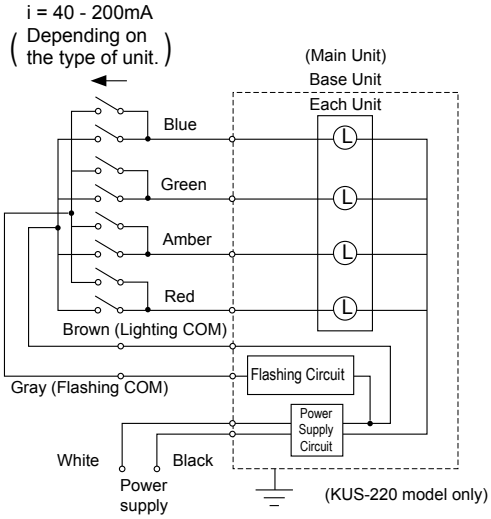


* Use contact relay
(Withstand voltage: 45V or more, Current Capacity: 1A or more) for external contact.
* Turn the power off before changing the order or adding units

● For Signal Light wiring, Lighting signal takes precedence over Flashing.

### Open Collector supported Base Unit (KUS-FC, C)

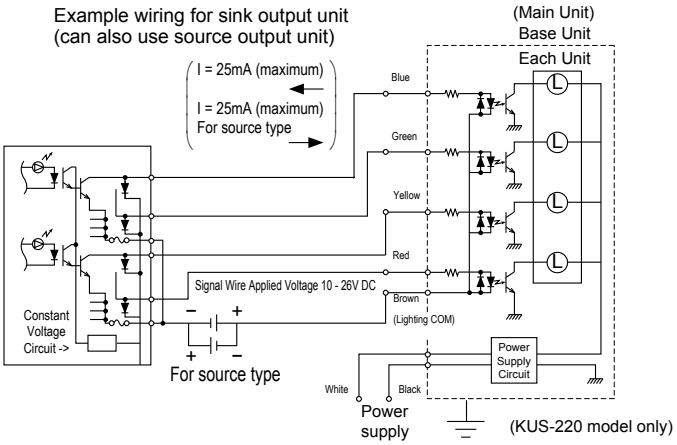


* For Open Collector enabled models, apply voltage externally between COM on the Main Unit and PLC. (Voltage Range 10 - 26V DC)
* If you use transistors or non-voltage contacts for signal wires, use the following capacity when wiring.

### Transistor Capacity (Recommended) (NPN/PNP)

| Model | NPN (2SC, 2SD) | PNP (2SA, 2SB) |
|---|---|---|
| Current Capacity | Ic>50mA | |
| Withstand Voltage | Vc>45V | |

Nominal Cross-sectional Area: Wire Type: Wire Length
KUS-24 model: Power Supply Wire AWG20: UL1007: 400mm
KUS-100/220 model : Power Supply Wire 0.75mm$^2$: VSF: 400mm

# Signal Light

| Page number | Page 99 | Page 100 | Page 101 | | | | | Page 102 | | | | |
|---|---|---|---|---|---|---|---|---|---|---|---|---|
| Model Name | Small LED Signal Light | Multi-color LED Signal Light | Small LED Signal Light | | | | | | | | | |
| Model | **NE** | **NE-M1-CL7** | **PES-A** | | | | | **PEW-A** | | | | |
| Product image | | | | | | | | | | | | |
| Rated Voltage | 24V DC | 12 - 24V DC | 24V AC/DC | 100V AC | 120V AC | 200V AC | 230V AC | 24V AC/DC | 100V AC | 120V AC | 200V AC | 230V AC |
| Size (mm) | ϕ57 | ϕ57 | ϕ82 | | | | | ϕ82 | | | | |
| IP | 65 | 66/67 | 23 (55 when mount rubber –sold separately– is used) | | | | | 54 (23 when the cord sticks out at the side) | | | | |
| Buzzer sound pressure in dB (at a distance of 1m) | | | | | | | | 70 - 85 | | | | |
| Body | ABS | ABS | ABS | | | | | ABS | | | | |
| Globe | Polycarbonate | Polycarbonate | AS | | | | | AS | | | | |
| Light Source | LED | LED | LED | | | | | LED | | | | |
| Lighting, flashing pattern | Lighting | Lighting | Lighting, flashing (in 3 stages) | | | | | Lighting, flashing (in 3 stages) | | | | |
| Terminal Block | | | | | | | | | | | | |
| Open collector | | | NPN | | | | | NPN | | | | |
| CE Marking | ○ | ○ | ○ | | | | | ○ | | | | |
| RoHS | ○ | ○ | | | ○ | | | | | ○ | | |
| UL Standard | | ○ | ○ | | ○ | | ○ | ○ | | ○ | | ○ |

| Page number | Page 109 | | | Page 109 | | |
|---|---|---|---|---|---|---|
| Model Name | Medium LED Flash Signal Light | | | Large LED Flash Signal Light | | |
| Model | **XPE** | | | **XME** | | |
| Product image | | | | | | |
| Rated Voltage | 12V DC | 24V DC | 100/200/230V AC | 12V DC | 24V DC | 100/200/230V AC |
| Size (mm) | ϕ162 | | | ϕ187 | | |
| IP | 23 | | | 23 | | |
| Buzzer sound pressure in dB (at a distance of 1m) | | | | | | |
| Body | AES | | | SPCD | | |
| Globe | AS | | | Polycarbonate | | |
| Light Source | LED | | | LED | | |
| Lighting, flashing pattern | Triple flash | | | Triple flash | | |
| Terminal Block | | | | | | |
| Open collector | | | | | | |
| CE Marking | ○ | ○ | ○ | ○ | ○ | ○ |
| RoHS | ○ | ○ | ○ | ○ | ○ | ○ |
| UL Standard | | | | | | |

| Page number | Page 104 | Page 105 | | Page 106 | | | | Page 108 |
|---|---|---|---|---|---|---|---|---|
| Model Name | Small LED Signal Light | Small LED Flash Signal Light | | | | | | Battery-powered Flash Signal Light |
| Model | **KHE** | **PSE** | | **LFH** | | | | **PFH-BT** |
| Product image | | | | | | | | |
| Rated Voltage | 24V DC | 12/24V DC | 100 - 230V AC | 12V DC | 24V DC | 48V DC | 100/120/200/230V AC | AA battery cell x 4 |
| Size (mm) | $\phi$ 100 | $\phi$ 82 | | $\phi$ 100 | | | | $\phi$ 100 |
| IP | 23 (55 when mount rubber is used–sold separately) | 23 (55 when mount rubber is used–sold separately) | | 66 | | | | 55 |
| Buzzer sound pressure in dB (at a distance of 1m) | | | | | | | | |
| Body | ABS | ABS | | ABS | | | | Polycarbonate |
| Globe | Polycarbonate | Polycarbonate | | Polycarbonate | | | | Polycarbonate |
| Light Source | LED | LED | | LED | | | | LED |
| Lighting, flashing pattern | Flashing, chase rotation, strobe | Triple flash | | Triple flash | | | | Double flash/Single flash |
| Terminal Block | | | | | | | | |
| Open collector | | | | | | | | |
| CE Marking | ○ | ○ | | ○ (excluding LFH-S) | | | ○ (excluding LFH-S) | ○ |
| RoHS | ○ | ○ | | ○ | | | | ○ |
| UL Standard | ○ | | | ○ (excluding LFH-S) | | | | |

| Page number | Page 110 | | Page 111 | | | Page 112 | |
|---|---|---|---|---|---|---|---|
| Model Name | Medium LED Chase Light/Flashing Signal Light | | Large LED Chase Light | | | Small Signal Light | |
| Model | **KPE-A** | | **KLE** | | | **PS** | |
| Product image | | | | | | | |
| Rated Voltage | 100V AC | 220V AC | 24V AC/DC | 100V AC | 200V AC | 12V AC/DC | 24V AC/DC |
| Size (mm) | $\phi$ 162 | | $\phi$ 162 | | | $\phi$ 82 | |
| IP | 23 | | 23 | | | 23 (55 when mount rubber is used–sold separately) | |
| Buzzer sound pressure in dB (at a distance of 1m) | | | | | | | |
| Body | AES | | SPCD/SUS304 | | | ABS | |
| Globe | AS | | AS | | | Polycarbonate | |
| Light Source | LED | | LED | | | Bulb | |
| Lighting, flashing pattern | Lighting, flashing (variable) | | Chase light (variable) | | | Lighting | |
| Terminal Block | | | | | | | |
| Open collector | | | | | | | |
| CE Marking | | | | | | | |
| RoHS | | | | | | | |
| UL Standard | | | | | | | |

* For specifications, see the product page.

# NE

| | |
|---|---|
| Colors | Red, Amber, Green, Blue, White |
| Globe | Polycarbonate resin with superb shock resistance and heat resistance. |

The NE Series features a compact design with long-life, zero maintenance LEDs. The NE signal lights are easy to install and carries an IP65 rating with high vibration resistance for operation in wet environments.

- Unique lens cut for enhanced visibility from all angles
- Built-in terminal block for easy wiring
- Very low power consumption
- IP65 rating - dust and water resistant

IP65 RoHS CE 57φ

## Specifications

| Model | Rated Voltage | Power consumption (maximum) | Operating Temperature Range | Mounting location | Protection Rating | Mass |
|---|---|---|---|---|---|---|
| **NE-24-R** | 24V DC | 0.63W | -30 °C - +50 °C (90%RH or less) | Indoors only (specific circuit board) | IP65 | 55g |
| **NE-24-Y** | | 0.63W | | | | |
| **NE-24-G** | | 0.56W | | | | |
| **NE-24-B** | | 0.53W | | | | |
| **NE-24-C** | | 0.45W | | | | |

## Model Code

**NE-24-R**

Model

Rated Voltage

| | |
|---|---|
| 24 | 24V DC |

Colors

| | |
|---|---|
| R | Red |
| Y | Amber |
| G | Green |
| B | Blue |
| C | White |

## Dimensions (mm)

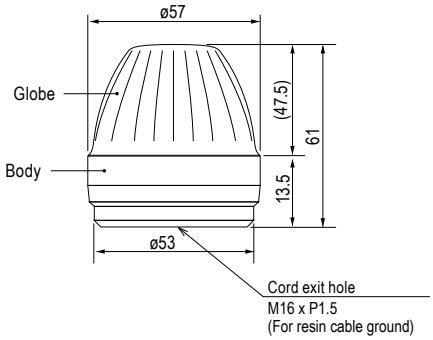


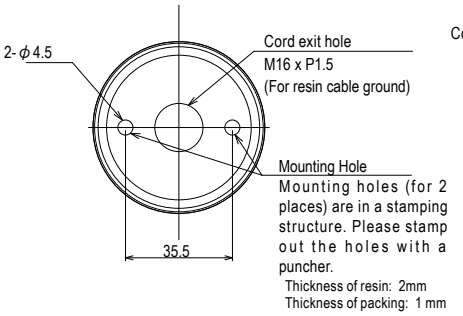


Base (with waterproof packing removed)

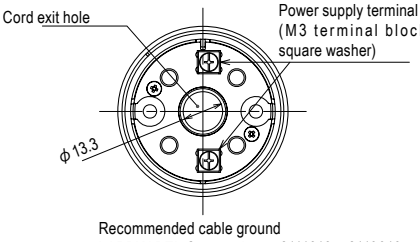


Upper surface of body (with glove removed)

## Wiring Diagram

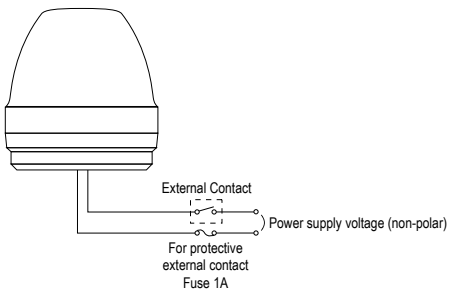

# NE-M1-CL7

Multi-color light

| | |
|---|---|
| Colors | Red, Amber, Green, Blue, Aqua, Purple, White |
| Globe | Polycarbonate resin with superb shock resistance and heat resistance. |

The NE-CL7 Series features a compact design with multi-color, 7 color LEDs. The NE-CL7 signal lights is easy to install and carries an IP66, and 67 ratings with high vibration resistance, ideal for sanitary cleaning applications.

- Clear, frosted lens for reducing false indication and even light distribution
- Very low power consumption
- IP66, 67 rating - dust and water resistant
- Jacketed-cable line out

IP66 IP67 RoHS UL CE 57φ

## Specifications

| Model | Rated Voltage | Power consumption (Standard) | Operating Temperature Range | Mounting location | Protection Rating | Mass |
|---|---|---|---|---|---|---|
| **NE-M1-CL7+B0953** | 12 - 24V DC | 1.35W | -20 °C - +50 °C (90%RH or less) | Indoors (specific circuit board) | IP66/IP67 | 150g |

## Dimensions (mm)

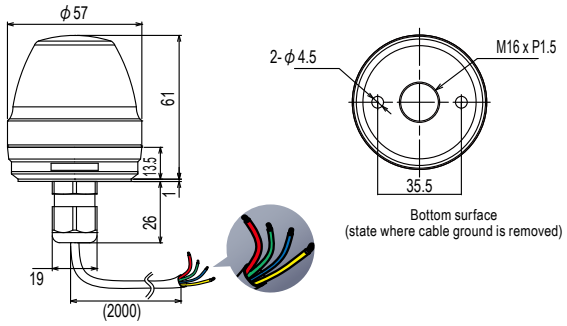


## Wiring Diagram

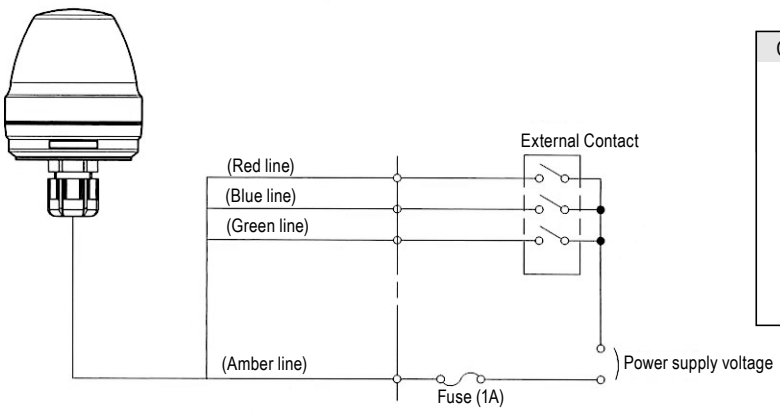


Color chart

| Wiring | LED color |
|---|---|
| Red | Red |
| Green | Green |
| Blue | Blue |
| Red/Green | Amber |
| Blue/Green | Light blue |
| Red/Blue | Purple |
| Red/Green/Blue | White |

# PES-A

IP23 (IP55 when mount rubber is used–sold separately) RoHS UL (24V, 120V 230V only) CE (only 24V) 82φ

| | |
|---|---|
| Colors | Red, Amber, Green, Blue |
| Globe | The material is AS resin, which is translucent and highly weather resistant. |

The PES Series features an 82mm diameter, maintenance-free LEDs, and comes in multiple voltage types

- Triple-reflection system for enhanced visibility and low power consumption
- 3 flashing patterns - 60/120/180 FPM with toggle switch
- Maintenance-free, high efficiency LEDs
- Outdoor weather resistant with effective light emission
- IP55 with gasket (SZ-210); IP23 without gasket
- Available Colors: Red, Amber, Green, Blue

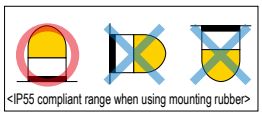


## Specifications

| Model | Colors | Rated Voltage | Inrush Current | Power Consumption | Number of flashes | Mass |
|---|---|---|---|---|---|---|
| **PES-24A** | -R/ -Y<br>-G/ -B | 24V AC/DC | 2.5A | 1.5W | High-speed approximately 180/minute<br>Medium-speed approximately 120/minute<br>Low-speed of approximately 60/minute<br>(Change with internal Switch) | 0.24kg |
| **PES-100A** | -R/ -Y<br>-G/ -B | 100V AC | 1.0A | 3.3W | | 0.43kg |
| **PES-120A** | -R/-Y<br>-G/-B | 120V AC | 1.0A | 3.5W | | |
| **PES-200A** | -R/ -Y<br>-G/ -B | 200V AC | 0.5A | 3.2W | | |
| **PES-230A** | -R/-Y<br>-G/-B | 230V AC | 0.5A | 3.8W | | |

* Products with specifications for 120V or 230V have not been manufactured for domestic use in Japan, thus if you want to use them in Japan, please use products with specifications for 100V or 200V.

## Model Code

**PES-24A-R**

Model

Rated Voltage

| | |
|---|---|
| 24 | 24V AC/DC |
| 100 | 100V AC |
| 120 | 120V AC |
| 200 | 200V AC |
| 230 | 230V AC |

Colors

| | |
|---|---|
| R | Red |
| Y | Amber |
| G | Green |
| B | Blue |

## Optional Parts

For details, see pages 182 to 187.

| Optional Parts | Model |
|---|---|
| Mount rubber | SZ-210 |
| Wallmount Bracket | SZ-008 |
| Wallmount Bracket | SZ-007 |
| Wallmount Bracket | SZ-023 |

* When using a bracket for mounting on the wall-face, the IP value will still be 23, even when using the mount rubber.

## Dimensions (mm)

PES-24A
PES-120A
PES-230A

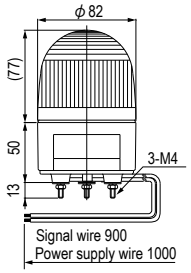


PES-100A
PES-200A

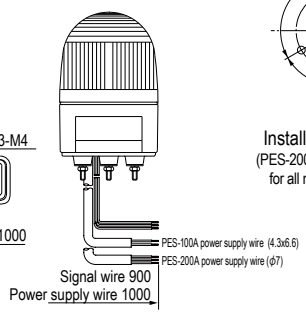


Installation Dimension Drawings

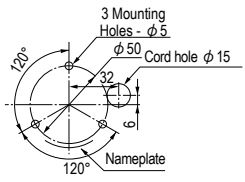


Installation Dimension Drawings
(PES-200A type, when using mount rubbers for all models)

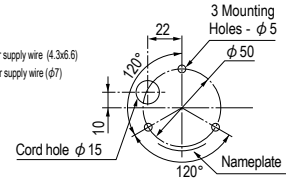


## Wiring Diagram

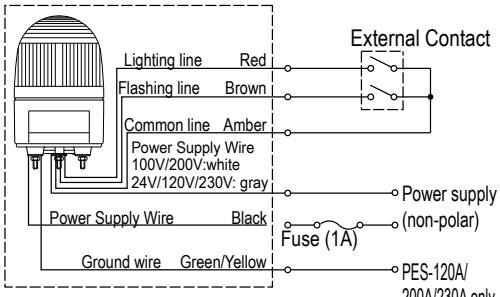


Lighting line blinking line
20V DC when open
55-83mA when short circuit

Nominal Cross-sectional Area, Wire Type: Wire Length
Signal Wire: AWG22: UL1007: 900mm
PES-24A power supply wire AWG20 : UL1007 : 1000mm
PES-120/230A power supply wire AWG18 : UL1015 : 1000mm
PES-100A power supply wire 0.75mm$^2$ : VCTFK : 1000mm
PES-200A power supply wire 0.75mm$^2$ : VCTF : 1000mm

* Connecting multiple units in parallel may cause a malfunction. Control using individual contacts.

# PEW-A



PEW-A model
PEW-AB model (with audible)

IP54 (IP23 when cord exit) | Sound pressure 85dB | RoHS | UL (24V, 120V 230V only) | CE (only 24V) | 82ϕ

| | |
|---|---|
| Colors | Red, Amber, Green, Blue |
| Globe | The material is AS resin, which is translucent and highly weather resistant. |
| Volume | Maximum 85dB (at 1m) (PEW-AB type) |

The PEW Series features an 82mm diameter, maintenance-free LEDs, and comes in multiple voltage types.

· Triple-reflection system for enhanced visibility and low power consumption
- Built-in 85dB audible alarm (PEW-AB model)
· 3 flashing patterns - 60/120/180 FPM with toggle switch
· Maintenance-free, high efficiency LEDs
· Outdoor weather resistant with effective light emission
· IP54; IP23 - when using side wire exit
· Available Colors: Red, Amber, Green, Blue

## Specifications

| Model | Colors | Rated Voltage | Inrush Current | Power Consumption | Number of flashes | Mass |
|---|---|---|---|---|---|---|
| **PEW-24A** | -R/-Y | 24V AC/DC | 2.5A | 1.5W | High-speed approximately 180/minute<br>Medium-speed approximately 120/minute<br>Low-speed of approximately 60/minute<br>(Change with internal Switch) | 0.32kg |
| | -G/-B | | | | | |
| **PEW-24AB** | -R/ -Y | | | 2.7W | | 0.34kg |
| | -G/-B | | | | | |
| **PEW-100A** | -R/-Y | 100V AC | 1.0A | 3.3W | | 0.52kg |
| | -G/-B | | | | | |
| **PEW-100AB** | -R/ -Y | | | 5.0W | | 0.54kg |
| | -G/-B | | | | | |
| **PEW-120A** | -R/-Y | 120V AC | 1.0A | 3.5W | | 0.52kg |
| | -G/-B | | | | | |
| **PEW-120AB** | -R/-Y | | | 5.2W | | 0.54kg |
| | -G/-B | | | | | |
| **PEW-200A** | -R/-Y | 200V AC | 0.5A | 3.2W | | 0.52kg |
| | -G/-B | | | | | |
| **PEW-200AB** | -R/ -Y | | | 4.9W | | 0.54kg |
| | -G/-B | | | | | |
| **PEW-230A** | -R/-Y | 230V AC | 0.5A | 3.8W | | 0.52kg |
| | -G/-B | | | | | |
| **PEW-230AB** | -R/-Y | | | 5.5W | | 0.54kg |
| | -G/-B | | | | | |

*Products with specifications for 120V or 230V have not been manufactured for domestic use in Japan, thus if you want to use them in Japan, please use products with specifications for 100V or 200V.

## Model Code

**PEW-24AB-R**

Model

Rated Voltage

| | |
|---|---|
| 24 | 24V AC/DC |
| 100 | 100V AC |
| 120 | 120V AC |
| 200 | 200V AC |
| 230 | 230V AC |

Specifications

| | |
|---|---|
| Blank | Without buzzer |
| B | With buzzer |

Colors

| | |
|---|---|
| R | Red |
| Y | Amber |
| G | Green |
| B | Blue |

## Optional Parts

| Optional Parts | Model |
|---|---|
| Wallmount Bracket | SZ-007 |
| Wallmount Bracket | SZ-008 |
| Wallmount Bracket | SZ-023 |

* When using SZ-007, SZ-008, or SZ-023, the cord will exit from the side.

## Dimensions (mm)

PEW-24A(B)
PEW-120A(B)
PEW-230A(B)

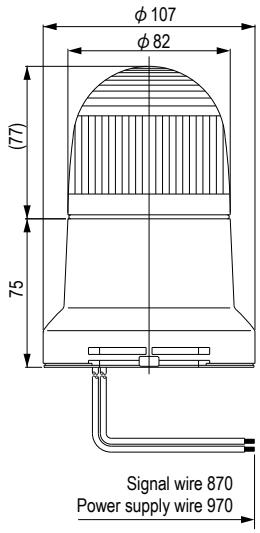


PEW-100A(B)
PEW-200A(B)

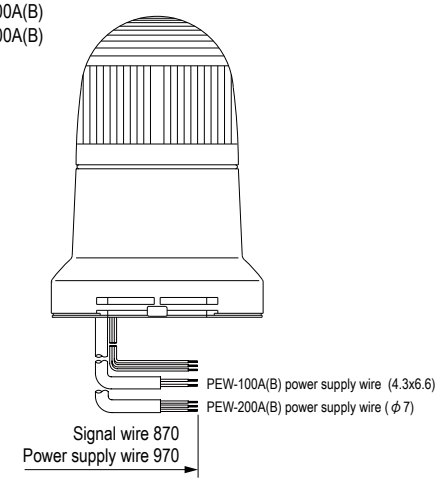


### Installation Dimension Drawings

When 2 point mounting

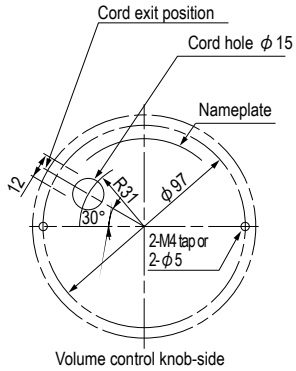


When 3 point mounting

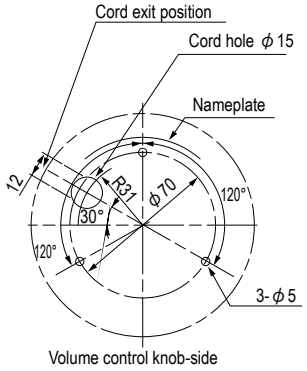


* For the length of the tap screw for 3 point mounting, please use those within the thickness of the clamp face +8mm. (Maximum board thickness: 5mm)

* Maximum board thickness when using the attached screw in 2 point mounting: 6mm

## Wiring Diagram

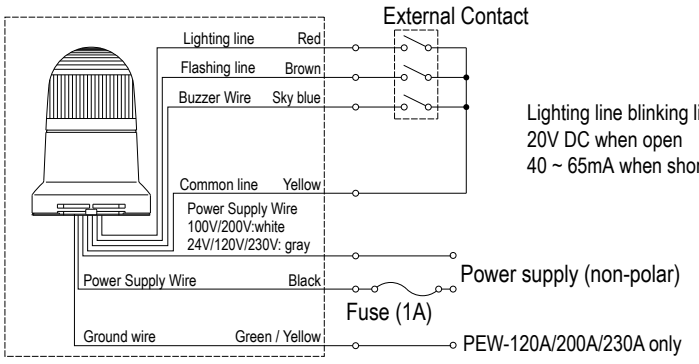


Lighting line blinking line
20V DC when open
40 ~ 65mA when short-circuit

NPN transistor

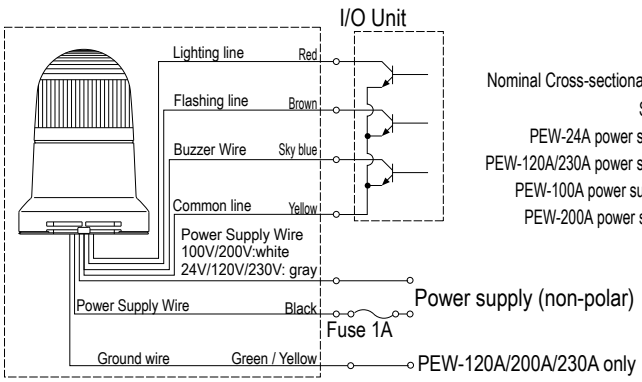


Nominal Cross-sectional Area, Wire Type: Wire Length
Signal Wire: AWG22: UL1007: 870mm
PEW-24A power supply wire AWG20 : UL1007 : 970mm
PEW-120A/230A power supply wire AWG18 : UL1015 : 970mm
PEW-100A power supply wire 0.75mm² : VCTFK : 970mm
PEW-200A power supply wire 0.75mm² : VCTF : 970mm

*Specifications for products without buzzers do not have a blue wire sticking out from the main body.
*Connecting multiple units in parallel may cause a malfunction. Control using individual contacts.

# KHE

When light is off

Clear globe specification

IP23 RoHS UL CE 100φ

IP55 when mount rubber is used–sold separately

| | |
|---|---|
| Colors | Red, Amber, Green, Blue |
| Globe | Polycarbonate resin with superb shock resistance and heat resistance |

The KHE Series features a 100mm diameter, clear lenses to reduce false indication, and 3 distinct signaling patterns including simulated rotation.

- Unique lens cut for enhanced visibility from all angles
- 3 light pattern options: simulated rotation, strobe, flashing
- Rotating light option without a motor for longer product life
- Very low power consumption
- · Available Colors: Red, Amber, Green, Blue

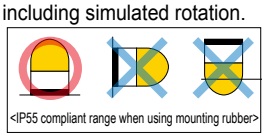

<IP55 compliant range when using mounting rubber>

## Specifications

| Model | Rated Voltage | Power Consumption | Number of flashes | | | Mass |
|---|---|---|---|---|---|---|
| | | | When flashing pattern | simulated rotation | When strobe pattern | |
| **KHE-24-R** | 24V DC | 8.2W | 55 times±10 minutes | 175 times±10 minutes | Double flash 75 times±10 minutes | 0.45kg |
| **KHE-24-Y** | | | | | | |
| **KHE-24-G** | | 10.1W | | | | |
| **KHE-24-B** | | 21.6W | | | | |

*Regarding the clear globe specification, size, price are the same for (-Z).

## Model Code

**KHE-24-R-Z**

Model

Rated Voltage

| | |
|---|---|
| 24 | 24V DC |

Colors

| | |
|---|---|
| R | Red |
| Y | Amber |
| G | Green |
| B | Blue |

| | |
|---|---|
| Blank | Globe with color |
| Z | Clear globe |

## Optional Parts

For details, see pages 182 to 187.

| Optional Parts | Model |
|---|---|
| Mount rubber | SZ-200 |
| Wallmount Bracket | SZ-007 |
| Wallmount Bracket | SZ-023 |

* When using a bracket for mounting on the wall-face, the IP value will still be 23, even when using the mount rubber.

## Dimensions (mm)

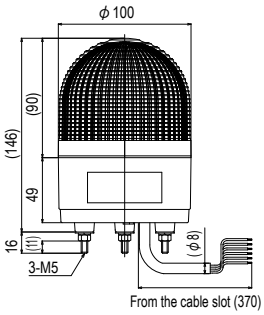


Installation Dimension Drawings

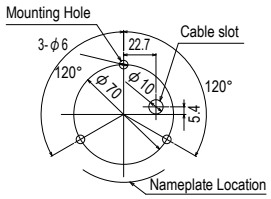


## Wiring Diagram

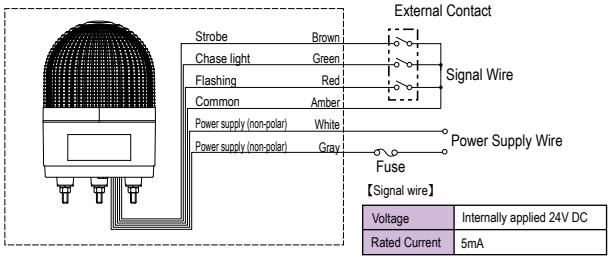


【Signal wire】

| | |
|---|---|
| Voltage | Internally applied 24V DC |
| Rated Current | 5mA |

*Regarding the fuse, use a fuse that suits the rated value of the machine on which the product is mounted.
*Maximum 20A, 5μs in-flow current flow in the power line. Please use a power source with consideration to capacity for this in-flow current.

# PSE

IP23 RoHS CE 82φ

(IP55 when mount rubber s used–sold separately)

| | |
|---|---|
| Colors | Red, Amber, Green, Blue |
| Globe | The material is AS resin, which is translucent and highly weather resistant. |

The PSE Series features an 82mm diameter, maintenance-free LEDs, and an unique triple-flash light pattern.

- Triple-flash light pattern with a rate of 110 flashes per minute
- Available in 12V or 24V and free range voltage input of AC 100-230V
- Available colors: Red, Amber, Green, Blue

## Specifications

| Model | Rated Voltage | Power Consumption | Flashing Rate | Mass |
|---|---|---|---|---|
| **PSE-M1-R/Y** | 12/24V DC | 3.0W | 110 ±10/minute (triple flash) | 0.30kg |
| **PSE-M2-R/Y** | 100 - 230V AC | 3.2W | | 0.35kg |

## Model Code

**PSE-M1-R**

Model

Rated Voltage

| | |
|---|---|
| M1 | 12/24V DC |
| M2 | 100 - 230V AC |

Colors

| | |
|---|---|
| R | Red |
| Y | Amber |
| G | Green |
| B | Blue |

## Optional Parts

For details, see pages 182 to 187.

| Optional Parts | Model |
|---|---|
| Mount rubber | SZ-210 |
| Wallmount Bracket | SZ-007 |

* When using a bracket for mounting on the wall-face, the IP value will still be 23, even when using the mount rubber.

## Dimensions (mm)

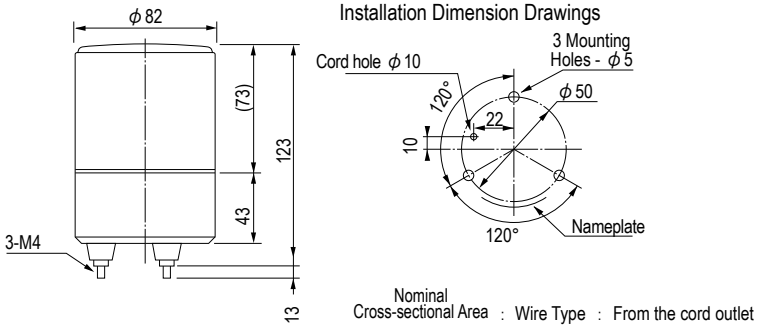


| | Nominal Cross-sectional Area | Wire Type | From the cord outlet |
|---|---|---|---|
| PSE-M1 | AWG22 | UL1007 | (340) mm |
| PSE-M2 | 0.75mm² | VCTFK | (340) mm |

## Wiring Diagram

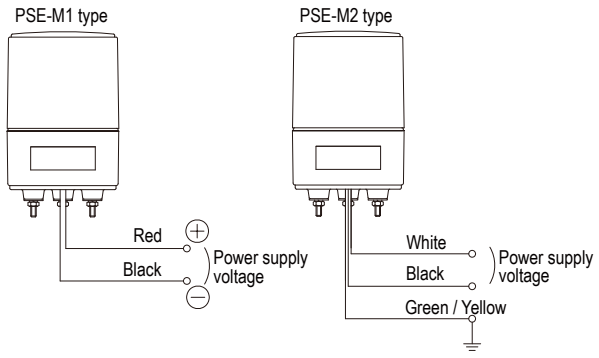

# LFH

| | |
|---|---|
| Colors | Red, Amber, Green, Blue, White |
| Globe | Polycarbonate resin with superb shock resistance and heat resistance. |

The LFH Series features a 100mm diameter, ultra-bright, maintenance-free LEDs, and comes in multiple voltage types.

· Outdoor-rated with ultra-bright LEDs
- Triple-flash light patterns with rates of 110 and 140 flashes per minute
- Light dimming function for use in close proximities or at night
· High vibration resistance, ideal for mounting on moving vehicles
· IP66 - dust, oil, water and non-corrosive material resistance
· Available Colors: Red, Amber, Green, Blue, White/Clear
- 3-year free-servicing after purchase

IP66 RoHS UL (Excluding LFH-S model) CE (Excluding LFH-S model LFH-48) 100ϕ

## Specifications

| Model | Rated Voltage | Operating Voltage Range | Power consumption (Standard) rated power Consumption (Upper: Standard/Lower: Maximum) | Ambient Operating Temperature | Storage Ambient Temperature | Mounting location | Mounting direction | Protection Rating | Vibration Resistance | Flashing Rate | Mass |
|---|---|---|---|---|---|---|---|---|---|---|---|
| LFH-12 | 12V DC | 9.5 - 15V DC | 5.0W<br>6.0W | -30 °C - +70 °C | -40 °C - +80 °C | Indoor/ Outdoor | Forward, side, reverse directions (forward direction only in wet places) | IP66 (IEC 60529) when installed in the forward direction | 90m/s2 | 110 ±10 /minute (triple flash) | 570g |
| LFH-24 | 24V DC | 20 - 30V DC | 4.5W<br>5.5W | | | | | | | | |
| LFH-48 | 48V DC | 35 - 60V DC | 6.5W<br>7.5W | | | | | | | | |
| LFH-M2 | 100/120/200/ 230V AC (50/60Hz) | 90 - 250V AC | 5.7W<br>6.8W | -20 °C - +60 °C | -30 °C - +70 °C | | | | 20m/s2 | | 610g |
| LFH-12S | 12V DC | 9.5 - 15V DC | 5.0W<br>6.0W | -30 °C - +70 °C | -40 °C - +80 °C | Indoor/ Outdoor | Forward, side, reverse directions (forward direction only in wet places) | IP66 (IEC 60529) when installed in the forward direction | 90m/s2 | 140±14 /minute (triple flash) | 570g |
| LFH-24S | 24V DC | 20 - 30V DC | 4.5W<br>5.5W | | | | | | | | |
| LFH-48S | 48V DC | 35 - 60V DC | 6.5W<br>7.5W | | | | | | | | |

## Model Code

**LFH-12S-R**

Model

Rated Voltage

| | |
|---|---|
| 12 | 12V DC |
| 24 | 24V DC |
| 48 | 48V DC |
| M2 | 100/120/200/230V AC |

Colors

| | |
|---|---|
| R | Red |
| Y | Amber |
| G | Green |
| B | Blue |
| C | White |

Flashing Rate

| | |
|---|---|
| Blank | 110 ±10 /minute |
| S | 140 ±14 /minute |

## Optional Parts

For details, see pages 182 to 187.

| Optional Parts | Model |
|---|---|
| Wallmount Bracket | SZ-170 |
| Wallmount Bracket | SZ-007 |

## Dimensions (mm)

Side view

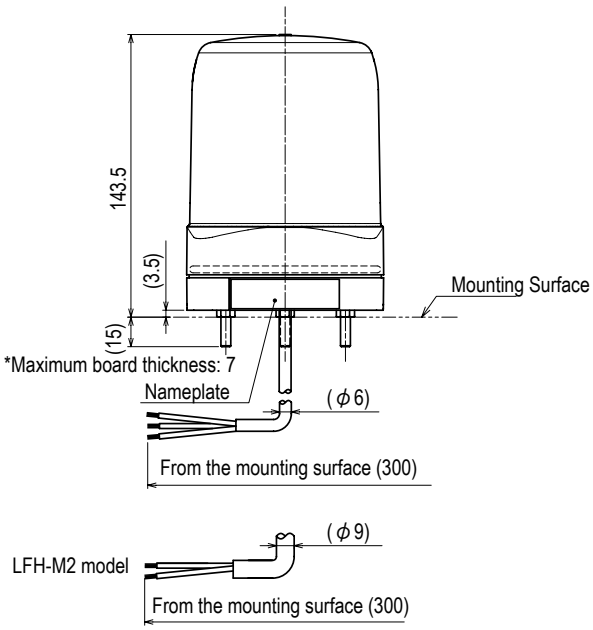


Top view

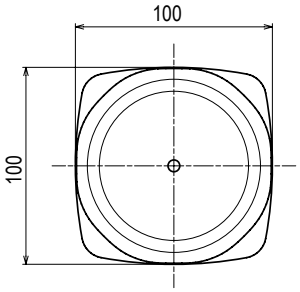


Installation Dimension Drawings

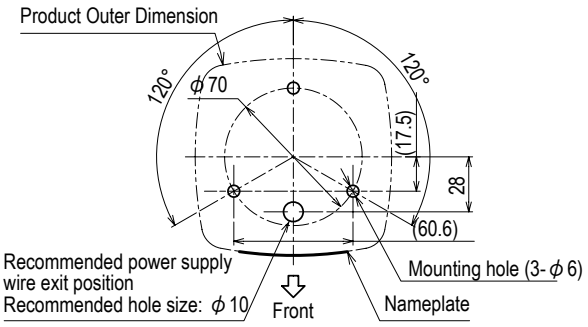


## Wiring Diagram

LFH-12/24/48/12S/24S/48S model

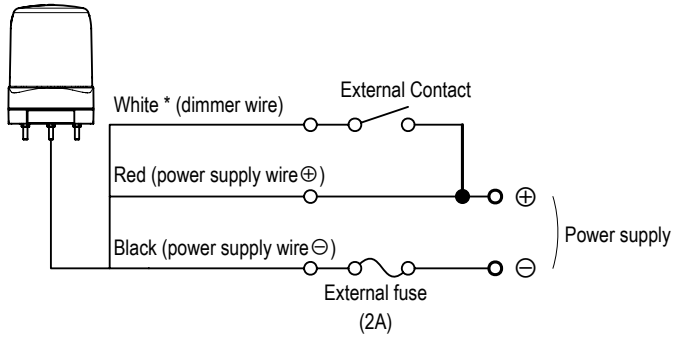


LFH-M2 model

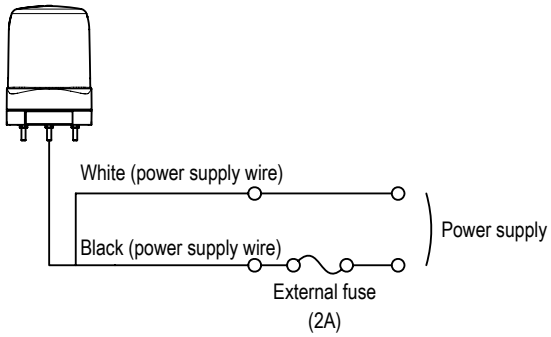


*Insulate the ends of the cable when the light dimmer function is not in use.

## Conformity Standards

| | |
|---|---|
| LFH-12 | UL 1638, CAN/ULC-S526-M87<br>RoHS Directive EN 50581<br>EMC Directives (EN 55015, EN 61547)<br>FCC Part 15 Subpart B Class A, ECE regulation No.10 |
| LFH-24 | |
| LFH-48 | UL 1638, CAN/ULC-S526-M87 |
| LFH-M2 | UL 1638, CAN/ULC-S526-M87<br>RoHS Directive EN 50581<br>EMC Directives (EN 61000-6-4, EN 61000-6-2)<br>Low Voltage Directives (EN 60598-1, EN 60598-2-1, EN 62031, EN 61347-1, EN 61347-2-13, EN 62471)<br>FCC Part 15 Subpart B Class A |
| LFH-12S | ECE Regulation No.10 |
| LFH-24S | |

# PFH-BT



Battery

IP55 | 100ϕ | RoHS | With magnet | LED flash | AA battery x 4

| | |
|---|---|
| Colors | Red, Amber |
| Globe | Polycarbonate resin, high shock resistance and heat resistance |

The PFH Series features an 101mm diameter and an AA battery power supply and a strong magnetic base, ideal for temporary maintenance and "lock out, tag out" applications.

- Power is supplied by 4 standard AA batteries
- 2 built-in flash patterns with toggle switch
- 2 modes for efficient battery use with toggle switch
- IP55 protection ratingWhite/Clear
- 3-year free-servicing after purchase

動画でチェック

## Specifications

| Model | PFH-BT-R/-Y |
|---|---|
| Power Supply | 4 - AA Sized Alkaline/Nickel Metal Hydride Batteries |
| Battery life | Power mode: 24 hours, Eco mode: 100 hours* |
| Ambient Operating Temperature / Humidity | -10 ºC - 50 ºC 90% RH or less, no condensation (not including the battery) |
| Mounting Location / Direction | Indoors/outdoors, front/side direction (power switch facing downward) |
| Protection Rating | IP55 (Front) |
| Peak luminous intensity (Typ.) | Red: Over 40 cd, Amber: Over 140 cd (in power mode) |
| Mass | 510g (excluding batteries) |
| Conformity Standards | RoHS Directive EN 50581, EMC Directives (EN61000-6-4, EN61000-6-2) |

*Changes depending on the type of batteries, and conditions and environment in which it is used.

## Dimensions (mm)

Side view

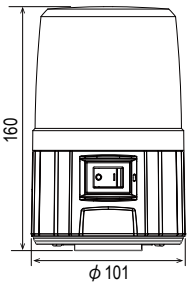


Bottom view

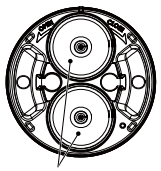

Magnet ( ϕ 45)

■ Toggle between "Flash pattern" and "Lighting mode" depending on your application: Indoors, outdoors, day or night.

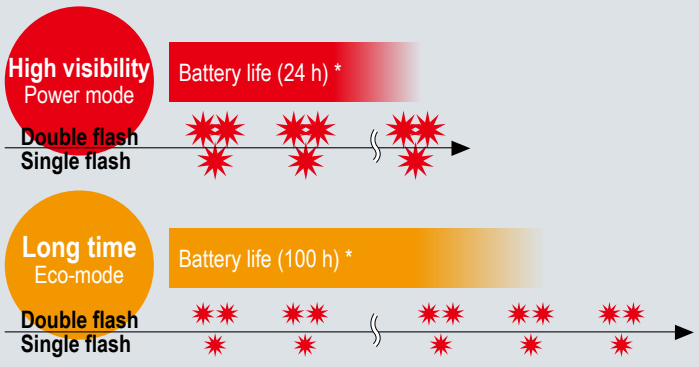


* Changes depending on the type of batteries, and conditions and environment in which it is used.

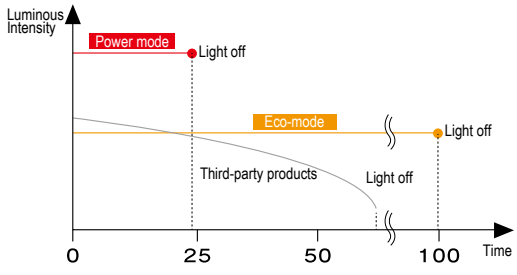


As the battery wears out, the light gets dark, the visibility does not deteriorate and the brightness is maintained until the end.

## Medium LED Flash Signal Light

# XPE

IP23 RoHS CE 162ϕ

| Colors | Red, Amber, Green, Blue |
|---|---|
| Globe | Polycarbonate resin with superb shock resistance and heat resistance |

The XPE Series features a 162mm diameter, a triple-flash rate pattern, and multiple voltage options.
- Triple-flash pattern with 110 flash rate per minute
- Durable structure with stainless steel bolts
- Built-in dimmer function
- Available colors: Red, Amber, Green, Blue

## Specifications

| Model | Rated Voltage | Power Consumption | Flashing Rate | Mass |
|---|---|---|---|---|
| **XPE-12** | 12V DC | 5.0W | 110±10 /minute (Triple flash) | 1.2kg |
| **XPE-24** | 24V DC | 4.5W | | |
| **XPE-M2** | 100/200/230V AC | 5.7W | | |

## Model Code

**XPE-12-R**

Model

Rated Voltage

| | |
|---|---|
| 12 | 12V DC |
| 24 | 24V DC |
| M2 | 100/200/230V AC |

Colors

| | |
|---|---|
| R | Red |
| Y | Amber |
| G | Green |
| B | Blue |

## Optional Parts

For details, see pages 182 to 187.

| Optional Parts | Model |
|---|---|
| Wallmount Bracket | SZ-023 |
| Wallmount Bracket | SZ-008 |

## Dimensions (mm)

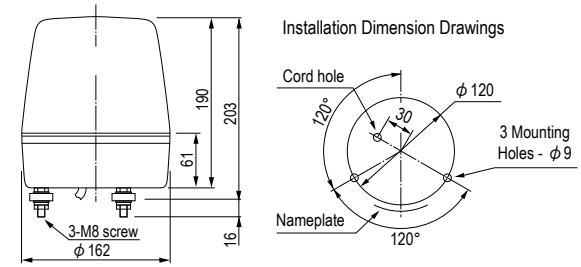


## Wiring Diagram

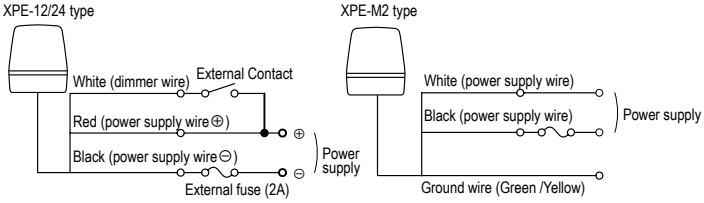


## Large LED Flash Signal Light

# XME

IP23 RoHS CE 187ϕ

| Colors | Red, Amber, Blue |
|---|---|
| Globe | Polycarbonate resin with superb shock resistance and heat resistance |

The XME Series features a 182mm diameter, a triple-flash rate pattern, and multiple voltage options.
- Triple-flash pattern with 110 flash rate per minute
- Durable structure with stainless steel lens mounts and bolts
- Built-in dimmer function
- Available colors: Red, Amber, Blue

## Specifications

| Model | Rated Voltage | Power Consumption | Flashing Rate | Mass |
|---|---|---|---|---|
| **XME-12** | 12V DC | 5.0W | 110±10 /minute (Triple flash) | 1.8kg |
| **XME-24** | 24V DC | 4.5W | | |
| **XME-M2** | 100/200/230V AC | 5.7W | | |

## Model Code

**XME-12-R**

Model

Rated Voltage

| | |
|---|---|
| 12 | 12V DC |
| 24 | 24V DC |
| M2 | 100/200/230V AC |

Colors

| | |
|---|---|
| R | Red |
| Y | Amber |
| B | Blue |

## Optional Parts

For details, see pages 182 to 187.

| Optional Parts | Model |
|---|---|
| Wallmount Bracket | SZ-008 |

## Dimensions (mm)

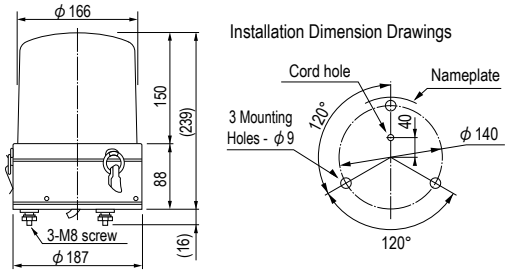


## Wiring Diagram

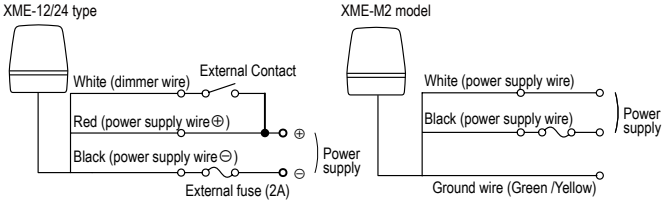

# KPE-A

| | |
|---|---|
| Colors | Red, Amber |
| Globe | The material is AS resin, which is translucent and highly weather resistant. |

The KPE Series features a 162mm diameter, ultra-bright LEDs, and a unique LED simulated rotation light pattern option.

- Ultra-bright LEDs; 4-times brighter than our standard models, i.e. KPE, KME
- Adjustable rotating light option without a motor for longer product life

· Available Colors: Red, Amber, Green, Blue

IP23 162ϕ

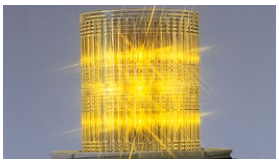

**LED chase light**
LED are laid out evenly over 8 sides and light up in turn in a circular direction as a result of the electronic circuits, and they light as though they are flowing. Moreover, the light is further dispersed through the globe. You can change the chase light rotation speed with the volume in the main body.

## Specifications

| Model | Rated Voltage | Power consumption (chase light / when flashing) | Chasing Rotation Rate/Flashing Rate | Vibration Resistance | Mass |
|---|---|---|---|---|---|
| **KPE-100A** | 100V AC | 8.5W/13W | 50 - 200/minute (chase light)<br>60/minute (when flashing) | 44.1m/s2 JIS D 1601-1990<br>Stage 4, Type 3, Class B compliant | 1.5kg |
| **KPE-220A** | 220V AC | 9.5W/14W | | | |

Operating Temperature Range: -30 °C to +60 °C, Mounting Direction: Indoors - Forward, Side, Reverse directions; Outdoors - Forward.

## Model Code

**KPE-100A-R**

Model

Rated Voltage

| | |
|---|---|
| 100 | 100V AC |
| 220 | 220V AC |

Colors

| | |
|---|---|
| R | Red |
| Y | Amber |

## Optional Parts

For details, see pages 182 to 187.

| Optional Parts | Model |
|---|---|
| Wallmount Bracket | SZ-023 |
| Wallmount Bracket | SZ-008 |

## Dimensions (mm)

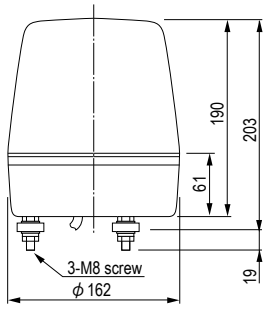


Installation Dimension Drawings

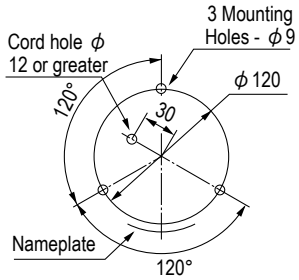


## Wiring Diagram

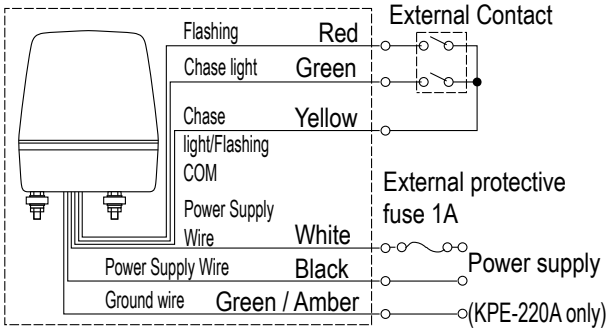


5V DC when signal wire is open
5mA when short-circuit

Nominal Cross-sectional Area : Wire Type: Wire Length

Signal Wire: AWG22: UL1007: 270mm

KPE-100A power supply wire 0.75mm$^2$ : VCTFK : 330mm

KPE-220A power supply wire 0.75mm$^2$ : VCTF : 330mm

*Connecting multiple units in parallel may cause a malfunction. Control using individual contacts.

# KLE



KLE model

KLE-S model (Stainless steel)

| | |
|---|---|
| Colors | Red, Amber |
| Globe | The material is AS resin, which is translucent and highly weather resistant. |

The KLE Series features a 162mm diameter, ultra-bright LEDs, and a unique LED simulated rotation light pattern option.

- 32 high-intensity LEDs with efficient light distribution
- Adjustable rotating light option without a motor for longer product life
- Durable structure design

· Available Colors: Red, Amber, Green, Blue

IP23 162ϕ

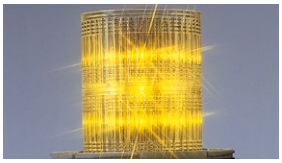

**LED Chase Light**
LED are laid out evenly over 8 sides and light up in turn in a circular direction as a result of the electronic circuits, and they light as though they are flowing. Moreover, the light is further dispersed through the globe. You can change the chase light rotation speed with the volume in the main body.

## Specifications

| Model | Rated Voltage | Power Consumption | Number of flashes | Vibration Resistance | Mass |
|---|---|---|---|---|---|
| **KLE-24** / **KLE-24S** | 24V AC/DC | 5.8W | 50 to 200/minute | 45m/s2 JIS D 1601-1995 Stage 4, Type 3, Class B compliant | 1.2kg |
| **KLE-100** / **KLE-100S** | 100V AC | 10.9W | | | 1.5kg |
| **KLE-200** | 200V AC | 10.7W | | | |

Operating Temperature Range: -30 °C to +60 °C, Mounting Direction: Indoors - Forward, Side, Reverse directions; Outdoors - Forward.

## Model Code

**KLE-24S-R**

Model

Rated Voltage

| | |
|---|---|
| 24 | 24V AC/DC |
| 100 | 100V AC |
| 200 | 200V AC |

Specifications

| | |
|---|---|
| Blank | SPCD body |
| S | Stainless steel body |

*S model does not support 200V AC

Colors

| | |
|---|---|
| R | Red |
| Y | Amber |

## Optional Parts

For details, see pages 182 to 187.

| Optional Parts | Model |
|---|---|
| Wallmount Bracket | SZ-023 |
| Wallmount Bracket | SZ-008 |

## Dimensions (mm)

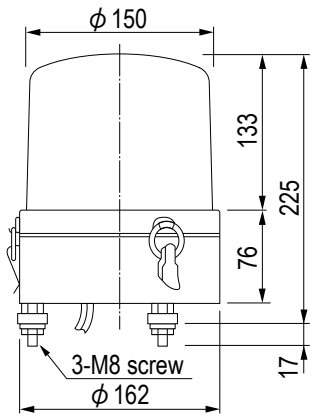


Installation Dimension Drawings

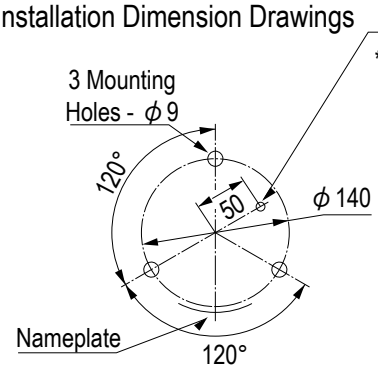


*To pass a 100V outlet, a ϕ 35 or bigger cord hole is required.

| Nominal Cross-sectional Area | : | Wire Type | : | Wire Length |
|---|---|---|---|---|
| KLE-24,KLE-24S (with transparent tube) | | | | |
| 1.25mm² | : | AVS | : | 230 |
| KLE-100, KLE-100S (with plug) | | | | |
| 0.75mm² | : | VCT | : | 330 |
| KLE-200 | | | | |
| 0.75mm² | : | VCT | : | 330 |

# PS



**PS-12 Scheduled to end production**

| | |
|---|---|
| Colors | Red, Amber, Green, Blue |
| Globe | Polycarbonate resin with superb shock resistance and heat resistance |

The PS Series features an 82mm diameter with incandescent bulbs as the light source as a low upfront cost option.

- IP55 with rubber mount (SZ-210); IP23 without rubber mount
- Available colors: Red, Amber, Green, Blue

PS model (Lighting)

When mount rubber (sold separately) is used

IP23 82ϕ

(IP55 when mount rubber is used–sold separately)

## Specifications

| Model | Rated Voltage | Power Consumption | Bulb | Number | Mass |
|---|---|---|---|---|---|
| PS-12 | 12V AC/DC | 10W | 12V 10W | 9 | 0.3kg |
| **PS-24** | 24V AC/DC | | 24V 10W | 10 | |

Bulb Shape 12V/24V Glass Bulb G18, Base BA15S

## Optional Parts

For details, see pages 182 to 187.

| Optional Parts | Model |
|---|---|
| Mount rubber | SZ-210 |
| Wallmount Bracket | SZ-007 |

*When using a wallmount bracket, even with the mount rubber the IP value is 23.

## Dimensions (mm)

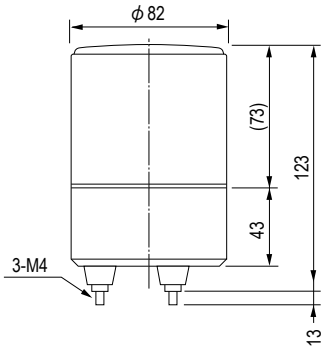


Installation Dimension Drawings

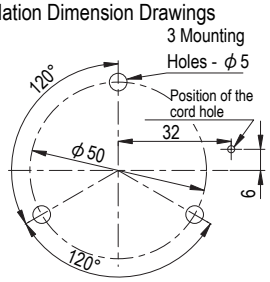


Nominal Cross-sectional Area : Wire Type : Wire Length
0.75mm²: VCTFK: From the cord outlet (340)
From the code hook (300)

# Revolving Warning Light

| Page number | Page 115 | | | | Page 116 | | | | | Page 118 | | | | Page 119 | | |
|---|---|---|---|---|---|---|---|---|---|---|---|---|---|---|---|---|
| Model Name | Compact LED Revolving Warning Light | | | | Small LED Revolving Warning Light | | | | | | | | | Extreme Vibration Resistant Large LED Revolving Warning Light | | |
| Model | **RLE** | | | | **RHE** | | | | | **SKHE** | | | | **RLR** | | |
| Product image | | | | | | | | | | | | | | | | |
| Rated Voltage | 12V DC | 24V DC | 100V AC | 220V AC | 12V DC | 24V DC | 48V DC | 100V AC | 200V AC | 12V DC | 24V DC | 100V AC | 200V AC | 12/24V DC | 48V DC | 100 - 240V AC |
| Size (mm) | ϕ 82 | | | | ϕ 100 | | | | | ϕ 118 | | | | ϕ 162 | | |
| IP | 23 (55 when mount rubber –sold separately– is used) | | | | 23 (55 when mount rubber –sold separately– is used) | | | | | 23 | | | | 66 | | |
| Buzzer sound pressure in dB (at a distance of 1m) | | | | | Typ.88 | | | | | Typ.88 | | | | | | |
| Body | ABS | | | | ABS | | | | | ABS (bracket part) | | | | ABS | | |
| Globe | Polycarbonate | | | | Polycarbonate | | | | | AS | | | | Polycarbonate | | |
| Light Source | LED | | | | LED | | | | | LED | | | | LED | | |
| Terminal Block | | | | | ○ | | | | | | | | | | | |
| Open collector | | | | | | | | | | | | | | | | |
| CE Marking | | | | | ○ | ○ | ○ | | | ○ | ○ | | | ○ | ○ | ○ |
| RoHS | | | | | ○ | ○ | ○ | ○ | ○ | ○ | ○ | ○ | ○ | ○ | ○ | |
| UL Standard | | | | | ○ (UL model) | ○ (UL model) | | | | | | | | | | |
| Other | | | | | | | | | | | | | | | | |
| Explosion protection | | | | | | | | | | | | | | | | |

| Page number | Page 123 | | | Page 124 | | | | Page 125 | | | | | Page 126 | | |
|---|---|---|---|---|---|---|---|---|---|---|---|---|---|---|---|
| Model Name | Wall-Mounted Small Revolving Warning Light | | | Small Revolving Warning Light | | | | Medium Revolving Warning Light | | | | | | | |
| Model | **WH-A** | | | **SKH-EA** | | | | **SKP-A** | | | | | **KP-A** | | |
| Product image | | | | | | | | | | | | | | | |
| Rated Voltage | 24V DC | 100V AC | 200V AC | 12V DC | 24V DC | 100V AC | 200V AC | 12V DC | 24V DC | 48V DC | 100V AC | 200V AC | 24V DC | 100V AC | 200V AC |
| Size (mm) | ϕ 100 | | | ϕ 100 | | | | ϕ 138 | | | | | ϕ 162 | | |
| IP | 54 (23 with buzzer) | | | 23 | | | | 23 | | | | | 23 | | |
| Buzzer sound pressure in dB (at a distance of 1m) | 90 | | | | | | | | | | | | | | |
| Body | ABS | | | Steel Plate (coated) | | | | Steel Plate (coated) | | | | | AES | | |
| Globe | Polycarbonate | | | AS | | | | Polycarbonate | | | | | AS | | |
| Light Source | Bulb | | | Bulb | | | | Bulb | | | | | Bulb | | |
| Terminal Block | | | | | | | | | | | | | | | |
| Open collector | | | | | | | | | | | | | | | |
| CE Marking | ○ | | | ○ | ○ | | | ○ | ○ | | | | ○ | | |
| RoHS | | | | | | | | | | | | | | | |
| UL Standard | | | | | | | | | | | | | | | |
| Other | Switch box compatible | | | | | | | | | | | | | | |
| Explosion protection | | | | | | | | | | | | | | | |

| Page number | Page 127 | | | | Page 128 | | Page 129 | | |
|---|---|---|---|---|---|---|---|---|---|
| Model Name | Large Revolving Warning Light | | | | Large Revolving Warning Light | | Large Revolving Warning Light | | |
| Model | **SKC-A** | | | | **HP** | | **KG** | | |
| Product image | | | | | | | | | |
| Rated Voltage | 12V DC | 24V DC | 100V AC | 200V AC | 12V DC | 24V AC | 12V DC | 24V DC | 100V AC |
| Size (mm) | ϕ 187 | | | | ϕ 180 | | ϕ 186 | | |
| IP | 23 | | | | | | 23 | | |
| Buzzer sound pressure in dB (at a distance of 1m) | | | | | | | | | |
| Body | Steel Plate (coated) | | | | ABS | | ABS | | |
| Globe | AS | | | | AS | | Yellow: polystyrene Red: AS | | |
| Light Source | Bulb | | | | Halogen | | Bulb | | |
| Terminal Block | | | | | | | | | |
| Open collector | | | | | | | | | |
| CE Marking | ○ | ○ | | | | | | | |
| RoHS | | | | | | | | | |
| UL Standard | | | | | | | Two-sided mirror | | |
| Other | Two-sided mirror | | | | | | | | |
| Explosion protection | | | | | | | | | |

| Page number | Page 120 | | | | | Page 121 | | | | | | Page 122 | | | | |
|---|---|---|---|---|---|---|---|---|---|---|---|---|---|---|---|---|
| Model Name | Compact Revolving Warning Light | | | | | Small Revolving Warning Light | | | | | | | | | | |
| Model | **RU/RS** | | | | | **RH-A** | | | | | | **SKH-A** | | | | |
| Product image | | | | | | | | | | | | | | | | |
| Rated Voltage | 12V DC | 24V DC | 100V AC | 220V AC | 24V AC | 12V DC | 24V DC | 100V AC | 120V AC | 200V AC | 240V AC | 12V DC | 24V DC | 100V AC | 200V AC | 24V AC |
| Size (mm) | $\phi$ 82 | | | | | $\phi$ 100 | | | | | | $\phi$ 118 | | | | |
| IP | 23 (55 when mount rubber –sold separately– is used) | | | | | 23 (55 when mount rubber –sold separately– is used) | | | | | | 23 (IP54 for watercraft) | | | | |
| Buzzer sound pressure in dB (at a distance of 1m) | | | | | | Typ.90 | | | | | | Typ.90 | | | | |
| Body | ABS | | | | | ABS | | | | | | ABS (bracket part) | | | | |
| Globe | Polycarbonate | | | | | Polycarbonate | | | | | | AS | | | | |
| Light Source | Bulb | | | | | Bulb | | | | | | Bulb | | | | |
| Terminal Block | | | | | | ○ | | | | | | | | | | |
| Open collector | | | | | | | | | | | | | | | | |
| CE Marking | ○ | ○ | | | ○ | ○ | ○ | | | | | ○ | ○ | | | ○ |
| RoHS | | | | | | | | | | | | | | | | |
| UL Standard | | | | | | ○ (UL model) | | | | | | | | | | |
| Other | | | | | | | | | | | | | | | | |
| Explosion protection | | | | | | | | | | | | | | | | |

| Page number | Page 126 | | | | | |
|---|---|---|---|---|---|---|
| Model Name | Large Revolving Warning Light | | | | | |
| Model | **SKL-A** | | | | | |
| Product image | | | | | | |
| Rated Voltage | 12V DC | 24V DC | 48V DC | 100V AC | 200V AC | 240V AC |
| Size (mm) | $\phi$ 162 | | | | | |
| IP | 23 | | | | | |
| Buzzer sound pressure in dB (at a distance of 1m) | | | | | | |
| Body | Steel plate (coating)/stainless steel (SUS 304) | | | | | |
| Globe | Polycarbonate | | | | | |
| Light Source | Bulb | | | | | |
| Terminal Block | | | | | | |
| Open collector | | | | | | |
| CE Marking | ○ | ○ | | | | |
| RoHS | | | | | | |
| UL Standard | | | | | | |
| Other | | | | | | |
| Explosion protection | | | | | | |

* For specifications, see the product page.

# RLE

IP23 82ϕ

IP55 when mount rubber: sold separately

| | |
|---|---|
| Colors | Red, amber, green (colors cannot be changed by replacing the globe) |
| Globe | Polycarbonate resin with superb shock resistance and heat resistance |
| Body | ABS resin |

The RLE Series features an 82mm diameter, ultra-bright, maintenance-free LEDs, and comes in multiple voltage types.

· Unique rotation reflection system for efficient warning signals
- IP55 with rubber mount (SZ-210); IP23 without rubber mount
· Available colors: Red, Amber, Green

## Specifications

| Model | Rated Voltage | Power Consumption | Number of flashes | Mass |
|---|---|---|---|---|
| **RLE-12** | 12V DC | Max. 2.5W | 120/minute | 0.4kg |
| **RLE-24** | 24V DC | Max .3.0W | | |
| **RLE-100** | 100V AC | 2.6W | | 0.6kg |
| **RLE-220** | 220V AC | 2.6W | | |

## Model Code

**RLE-12-R**

Model

Rated Voltage

| | |
|---|---|
| 12 | 12V DC |
| 24 | 24V DC |
| 100 | 100V AC |
| 220 | 220V AC |

Colors

| | |
|---|---|
| R | Red |
| Y | Amber |
| G | Green |

## Optional Parts

For details, see pages 182 to 187.

| Optional Parts | Model |
|---|---|
| Mount rubber | SZ-210 |
| Wallmount Bracket | SZ-007 |

*When using a wallmount bracket, IP value is 23 even with a mount rubber.

## Dimensions (mm)

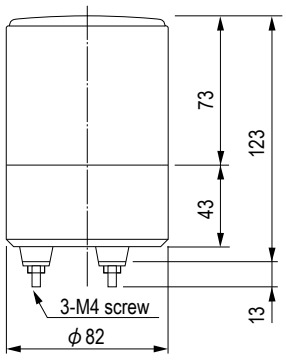


Installation Dimension Drawings

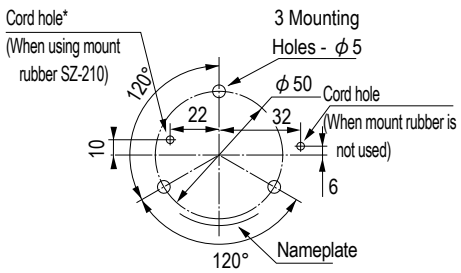


*To pass a 100V outlet, a ϕ30 cord hole is required.

Nominal Cross-sectional Area : Wire Type : Wire Length

RLE-12,24
0.5mm² : AV : 200
RLE-100 (with plug)
0.75mm² : VCTFK : 300
RLE-220
0.75mm² : VCTF : 340

# RHE



RHE model
RHEB model
(with audible)

Sound pressure 88dB | IP23 | RoHS | UL | CE | 100ϕ

(IP55 when mount rubber is used–sold separately) (RHE-UL only) (12V, 24V, 48V only)

| | |
|---|---|
| Colors | Red, amber, green, blue (You cannot change colors by replacing the globe) |
| Globe | Polycarbonate resin with superb shock resistance and heat resistance |

The RHE Series features an 82mm diameter, ultra-bright, energy-efficient LED system, and comes with a built-in 90dB audible alarm.

· 1 LED chip light source for high energy-efficiency without sacrificing visibility
- Built-in 90dB audible alarm
- IP55 with rubber mount (SZ-220A); IP23 without rubber mount
- Built-in terminal block for easy wiring
· Available colors: Red, Amber, Green, Blue

## Specifications

### RHE specifications

| Model | | Rated Voltage | Current Consumption ( ) with buzzer | Inrush Current | Number of flashes | Mass | Colors |
|---|---|---|---|---|---|---|---|
| RHE | RHEB | | | | | | |
| **RHE-12** | **RHEB-12** | 12V DC | 0.25A (0.28A) | 1.5A/100msec | 120/minute | 0.4kg | R: Red or Y: Amber |
| | | | | | | | G: Green or B: Blue |
| **RHE-24** | **RHEB-24** | 24V DC | 0.16A (0.19A) | 5.0A/4msec | | | R: Red or Y: Amber |
| | | | | | | | G: Green or B: Blue |
| **RHE-48** | —— | 48V DC | 0.08A | —— | | | R: Red or Y: Amber |
| | | | | | | | G: Green or B: Blue |
| **RHE-100** | **RHEB-100** | 100V AC | 0.042A (0.045A) | 1.0A/20msec | | 0.6kg | R: Red or Y: Amber |
| | | | | | | | G: Green or B: Blue |
| **RHE-200** | **RHEB-200** | 200V AC | 0.022A (0.025A) | 0.5A/20msec | | | R: Red or Y: Amber |
| | | | | | | | G: Green or B: Blue |

### RHE-UL model (UL model)

| Model | | Rated Voltage | Current Consumption ( ) with buzzer | Inrush Current | Number of flashes | Mass | Colors |
|---|---|---|---|---|---|---|---|
| RHE | RHEB | | | | | | |
| **RHE-12UL** | **RHEB-12UL** | 12V DC | 0.25A (0.28A) | 1.5A/100msec | 120/minute | 0.4kg | R: Red or Y: Amber |
| | | | | | | | G: Green or B: Blue |
| **RHE-24UL** | **RHEB-24UL** | 24V DC | 0.16A (0.19A) | 5.0A/4msec | | | R: Red or Y: Amber |
| | | | | | | | G: Green or B: Blue |

## Model Code

**RHEB-24UL-R**

Model: RHE

Specifications

| | |
|---|---|
| Blank | Revolving Light |
| B | Revolving light with buzzer |

Rated Voltage

| | |
|---|---|
| 12 | 12V DC |
| 24 | 24V DC |
| 48 | 48V DC |
| 100 | 100V AC |
| 200 | 200V AC |

Conformity Standards

| | |
|---|---|
| UL | UL model |

Colors

| | |
|---|---|
| R | Red |
| Y | Amber |
| G | Green |
| B | Blue |

## Optional Parts

For details, see pages 182 to 187.

| Optional Parts | Model |
|---|---|
| Mount rubber | SZ-200 |
| Wallmount Bracket | SZ-007 |

*When using a wallmount bracket, IP value is 23 even with a mount rubber.

## Dimensions (mm)

RHE

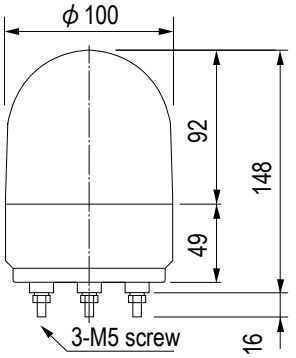


Installation Dimension Drawings

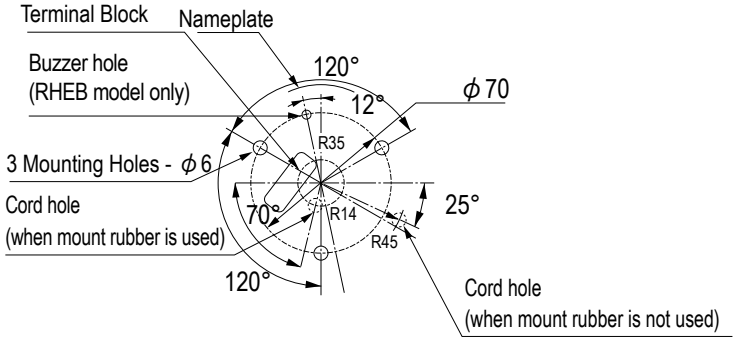


*The applicable crimp terminal has a thread hole diameter of 3 mm The outer diameter can be up to ϕ 8mm.

## Wiring Diagram

Without buzzer

Bottom view

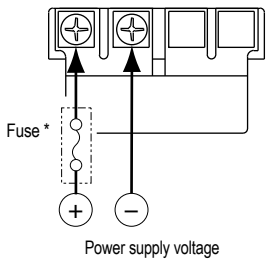


Power supply voltage

For AC type, there is no + / - polarity.

* For the fuse, please use a 3A fuse.
(RHE (B)-100/200, UL model is 1A)

DC model (with buzzer)

Bottom view

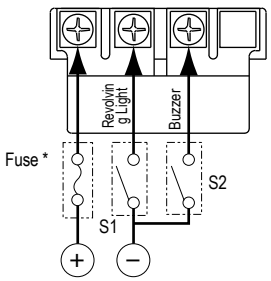


Power supply voltage

| Contact S1 | Contact S2 | Description |
|---|---|---|
| ON | OFF | Revolving Light |
| OFF | ON | Buzzer |
| ON | ON | Revolving light & buzzer |

AC model (with buzzer)

Bottom view

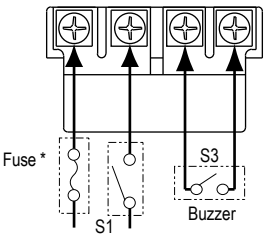


Power supply voltage

Buzzer contact open circuit
voltage 12V DC
Short circuit electric current 40mA

| Contact S3 | Description |
|---|---|
| OFF | Revolving Light |
| ON | Revolving light & buzzer |

* Terminal block system wiring is not included. (UL1007 0.5mm² wiring for RHE-12,24,48; UL1430 0.5mm² wiring for RHE-12UL,24UL have been set for 240±30mm)

# SKHE



SKHE model
SKHEB model (with audible)

Sound pressure 88dB (Buzzer specification only) | IP23 | RoHS | CE (12V, 24V only) | 118φ

| | |
|---|---|
| Colors | Red, amber, green, blue (You cannot change colors by replacing the globe) |
| Globe | The material is AS resin, which is translucent and highly weather resistant. |

The SKHE Series features an 118mm diameter, ultra-bright, high energy-efficient LED system, and comes with a built-in 90dB audible alarm.

· 1 LED chip light source for high energy-efficiency without sacrificing visibility
- Built-in 90dB audible alarm
- Built-in terminal block for easy wiring
· Available colors: Red, Amber, Green, Blue

## Specifications

| Model | | Rated Voltage | Current Consumption | Number of flashes | Mass | Colors |
|---|---|---|---|---|---|---|
| SKHE | SKHEB | | | | | |
| **SKHE-12** | **SKHEB-12** | 12V DC | 0.22A | 120/minute | 0.4kg | R: Red or Y: Amber |
| | | | | | | G: Green or B: Blue |
| **SKHE-24** | **SKHEB-24** | 24V DC | 0.16A | | | R: Red or Y: Amber |
| | | | | | | G: Green or B: Blue |
| **SKHE-100** | **SKHEB-100** | 100V AC | 0.042A | | 0.6kg | R: Red or Y: Amber |
| | | | | | | G: Green or B: Blue |
| **SKHE-200** | **SKHEB-200** | 200V AC | 0.022A | | | R: Red or Y: Amber |
| | | | | | | G: Green or B: Blue |

## Model Code

**SKHEB-24-R**

Model

Specifications

| | |
|---|---|
| Blank | Revolving Light |
| B | Revolving light with buzzer |

Rated Voltage

| | |
|---|---|
| 12 | 12V DC |
| 24 | 24V DC |
| 100 | 100V AC |
| 200 | 200V AC |

Colors

| | |
|---|---|
| R | Red |
| Y | Amber |
| G | Green |
| B | Blue |

## Optional Parts

For details, see pages 182 to 187.

| Optional Parts | Model |
|---|---|
| Wallmount Bracket | SZ-007 |

## Dimensions (mm)

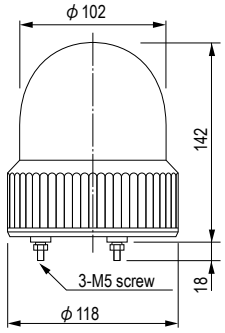


Installation Dimension Drawings

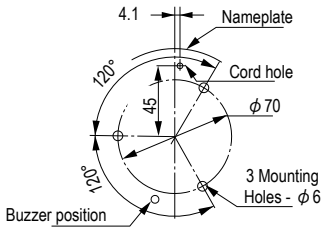


Nominal Cross-sectional Area : Wire Type : Wire Length
SKHE-12/24 : 0.5mm²: AV: 300±30
SKHE-100 (with plug): 0.75mm²: VCTFK: 300±30
SKHE-200: 0.75mm² : HVCTFK: 310±30

*Please be careful, as the position of the name plate against the installation surface changes according to how the globe is fastened.
*To pass a 100V outlet, a φ 30 cord hole is required.

## Wiring Diagram

DC model

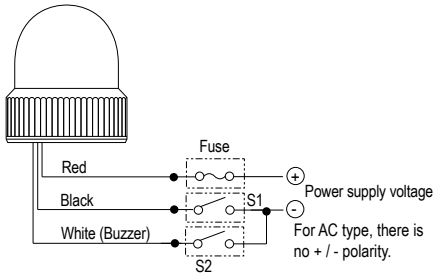


| Contact S1 | Contact S2 | Description |
|---|---|---|
| ON | OFF | Revolving Light |
| OFF | ON | Buzzer |
| ON | ON | Revolving light & buzzer |

*Wiring diagram is for model B. There is no white wire for units without a buzzer.

AC model (100V AC)

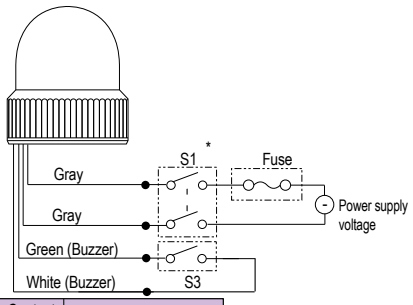


| Contact S3 | Description |
|---|---|
| OFF | Revolving Light |
| ON | Revolving light & buzzer |

*Wiring diagram is for model B. There are no white and green wires for units without a buzzer.
Buzzer contact open circuit voltage 12V DC Short circuit current 40mA

AC model (200V AC)

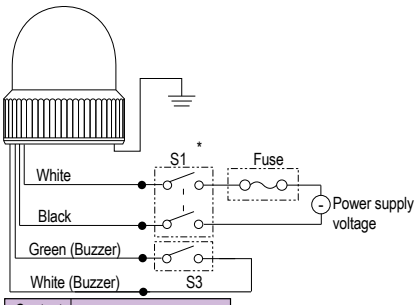


| Contact S3 | Description |
|---|---|
| OFF | Revolving Light |
| ON | Revolving light & buzzer |

*Wiring diagram is for model B. There are no white and green wires for units without a buzzer.
Buzzer contact open circuit voltage 12V DC Short circuit current 40mA

*In addition to a two-way switch, you can also use a one-way switch.

# RLR

IP66 RoHS CE (12V/24V, 48V only) 162φ

| | |
|---|---|
| Colors | Red, Amber, Green, Blue |
| Globe | Polycarbonate resin with superb shock resistance and heat resistance |

The RLR Series features an 162mm diameter, ultra-bright, maintenance-free LEDs, with high vibration resistance, ideal for moving vehicles.

· Gear-method system for controlling light source and motor significantly increases product life
- IP66 protection rating for dust and water
- Vibration resistance for up to 11.2G
· Available colors: Red, Amber, Green, Blue

## Specifications

| Model | Rated Voltage | Rated Power Consumption | Number of flashes | Mass | Colors |
|---|---|---|---|---|---|
| **RLR-M1** | 12/24V DC | 7.6W | 105/minute | 1.0kg | R: Red or Y: Amber |
| **RLR-M1-P** | | | | | G: Green or B: Blue |
| **RLR-04** | 48V DC | 8.2W | | | R: Red or Y: Amber |
| **RLR-04-P** | | | | | G: Green or B: Blue |
| **RLR-M2** | 100 - 240V AC | 7.8W | | 1.06kg | R: Red or Y: Amber |
| | | | | | G: Green or B: Blue |
| **RLR-M2-P** | 100 - 240V AC | 7.8W | | | R: Red or Y: Amber |
| | | | | | G: Green or B: Blue |

## Model Code

**RLR-04-P-R**

Model

Rated Voltage

| | |
|---|---|
| 04 | 48V DC |
| M1 | 12/24V DC |
| M2 | 100 - 240V AC |

Mounting pitch

| | |
|---|---|
| Blank | φ140 |
| P | φ120 |

Colors

| | |
|---|---|
| R | Red |
| Y | Amber |
| G | Green |
| B | Blue |

## Optional Parts

For details, see pages 182 to 187.

| Optional Parts | Model |
|---|---|
| Wallmount Bracket | SZ-023 |
| Wallmount Bracket | SZ-008 |

## Dimensions (mm)

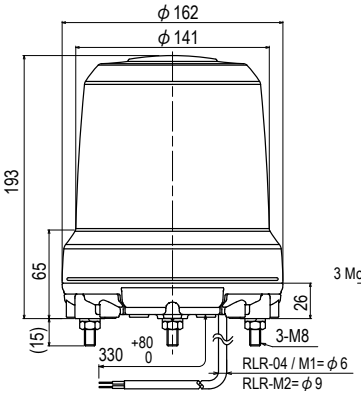


Installation Dimension Drawings

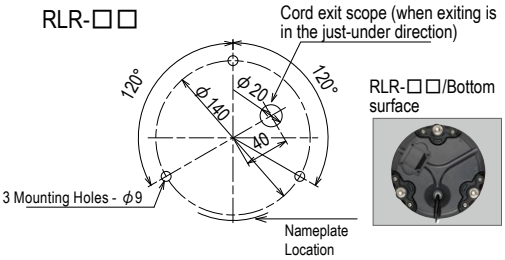


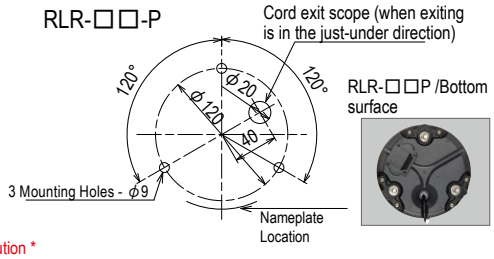


* Caution *
When it needs to be water resistant, please be sure to apply water-resistance at the time of wiring.
There is possibility of water penetration from the power source terminal surface.

Nominal cross sectional area : Wire type
RLR-04/M1 : 0.5mm² : HVCTF
RLR-M2 : 0.75mm² : VCT

# RU/RS



RU/RS model
RUP model
(with a pole, for indoors)

RU model
RS model
RUP model

When mount rubber (sold separately) is used

| | |
|---|---|
| Colors | Red, Amber, Green, Blue |
| Globe | Polycarbonate resin with superb shock resistance and heat resistance |
| Body | ABS resin |

The RU/RS Series features an 82mm diameter and automobile incandescent bulbs as a light source for high vibration resistance, ideal for moving vehicles.

· Automobile incandescent bulbs for high vibration resistance
- Comes in a rounded dome (RU models) and circular dome shapes (RS models)
· IP55 with rubber mount (SZ-210); IP23 without rubber mount
· Available colors: Red, Amber, Green, Blue

(IP55 compliant when using mounting rubber)

IP23 (IP55 when mount rubber s used–sold separately)

82ϕ

CE (12V, 24V only)

## Specifications

| Model | | | Rated Voltage | Current Consumption | Number of flashes | Bulb | | Mass | |
|---|---|---|---|---|---|---|---|---|---|
| RU | RUP | RS | | | | | Number | RU/RS | RUP |
| **RU-12** | **RUP-12** | **RS-12** | 12V DC | 0.5A | 120/minute | 12V 6W | 18 | 0.4kg | 0.8kg |
| **RU-24** | **RUP-24** | **RS-24** | 24V DC | 0.3A | | 24V 6W | 19 | | |
| **RU-100** | **RUP-100** | **RS-100** | 100V AC | 0.075A | | 12V 6W | 18 | 0.6kg | 1.0kg |
| **RU-220** | **RUP-220** | **RS-220** | 220V AC | 0.035A | | | | | |
| **RU-24AC** | **RUP-24AC** | —— | 24V AC | 0.3A | | 24V 6W | 19 | 0.4kg | 0.8kg |

| Light bulb No. | Model |
|---|---|
| 18 | D01200604-F1 |
| 19 | D02400604-F1 |

Bulb Shape Glass Bulb G14, Base BA9S

*Light bulbs come in packs of 10.
*Stock for some light bulbs may be limited, as products become discontinued. We ask for your understanding in this regard.

## Model Code

**RUP-100-R**

Model

| | |
|---|---|
| RU | |
| RS | |
| RUP | |

Rated Voltage

| | |
|---|---|
| 12 | 12V DC |
| 24 | 24V DC |
| 24AC | 24V AC |
| 100 | 100V AC |
| 220 | 220V AC |

Colors

| | |
|---|---|
| R | Red |
| Y | Amber |
| G | Green |
| B | Blue |

## Optional Parts

For details, see pages 182 to 187.

| Optional Parts | Model |
|---|---|
| Mount rubber | SZ-210 |
| Wallmount Bracket | SZ-007 |

*Mount rubber cannot be used for RUP-models
*When using a wallmount bracket, IP value is 23 even with a mount rubber.

## Dimensions (mm)

RS model

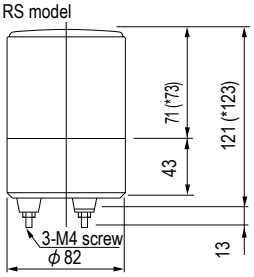


*RS-12,24

RU model

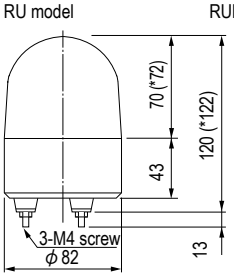


*RU/RUP-12,24

RUP model

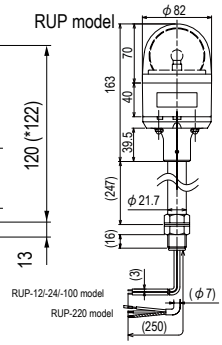


Installation Dimension Drawings

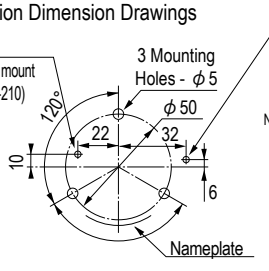


Nominal Cross-sectional Area : Wire Type : Wire Length
RU/RS-12,-24 : 0.5mm² : AV : 280
RUP-12,-24 : 0.5mm² : AV : 250
RU/RS-100 (with plug) : 0.75mm² : VCTFK : 300
RUP-100 : 0.75mm² : VFF : 250
RU/RS-220 : 0.75mm² : VCTF : 340
RUP-220 : 0.75mm² : VCTF : 250

*To pass a 100V outlet, a ϕ 30 or bigger cord hole is required.

# RH-A



RH-A model
RHB-A model
(With electronic buzzer)
RH-AUL model
RHB-AUL model
(With electronic buzzer)

RH-A model

When mount rubber is used
(sold separately)

Sound pressure 90dB
IP23 (IP55 when mount rubber is used–sold separately–)
UL (UL model only)
CE (12V, 24V only)
100ϕ

| | |
|---|---|
| Colors | Red, Amber, Green, Blue |
| Globe | Polycarbonate resin with superb shock resistance and heat resistance |
| Body | ABS resin |

The RH Series features an 100mm diameter, built-in 90dB audible alarm, and automobile incandescent bulbs as a light source for high vibration resistance, ideal for moving vehicles.

· Automobile incandescent bulbs for high vibration resistance
- Built-in 90dB audible alarm
- Built-in terminal block for easy wiring
· IP55 with rubber mount (SZ-220A); IP23 without rubber mount
· Available colors: Red, Amber, Blue

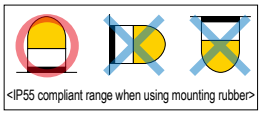
<IP55 compliant range when using mounting rubber>

## Specifications

| Model RH | Model RHB | Rated Voltage | Current Consumption RH | Current Consumption RHB | Number of flashes | Bulb | Bulb Number | Mass |
|---|---|---|---|---|---|---|---|---|
| **RH-12A** | **RHB-12A** | 12V DC | 0.8A | 0.85A | 170/minute | 12V 10W | 9 | 0.4kg |
| **RH-24A** | **RHB-24A** | 24V DC | 0.5A | 0.55A | | 24V 10W | 10 | |
| **RH-24AUL** | **RHB-24AUL** | | | | | | | |
| **RH-100A** | **RHB-100A** | 100V AC | 0.065A | 0.115A | | 12V 5W | 12 | 0.6kg |
| **RH-120AUL** | **RHB-120AUL** | 120V AC | 0.065A | 0.115A | | | | |
| **RH-200A** | **RHB-200A** | 200V AC | 0.03A | 0.08A | | | | |
| **RH-240AUL** | **RHB-240AUL** | 240V AC | 0.03A | 0.08A | | | | |

Bulb Shape Glass Bulb G18, Base BA15S

| Light bulb No. | Model |
|---|---|
| 9 | D01201003A-F1 |
| 10 | D02401003A-F1 |
| 12 | D01200503A-F1 |

*Light bulbs come in packs of 10.
*Stock for some light bulbs may be limited, as products become discontinued. We ask for your understanding in this regard.

## Model Code

**RHB-24A-R**

Model
RH

Specifications

| | |
|---|---|
| Blank | Revolving Light |
| B | Revolving light with buzzer |

Rated Voltage

| | |
|---|---|
| 12A | 12V DC |
| 24A | 24V DC |
| 24AUL | 24V DC (UL model) |
| 100A | 100V AC |
| 120AUL | 120V AC (UL model) |
| 200A | 200V AC |
| 240AUL | 240V AC (UL model) |

Colors

| | |
|---|---|
| R | Red |
| Y | Amber |
| G | Green |
| B | Blue |

## Optional Parts

For details, see pages 182 to 187.

| Optional Parts | Model |
|---|---|
| Mount rubber | SZ-200 |
| Wallmount Bracket | SZ-007 |

*When mount rubber is used, the buzzer sound becomes degraded, and sound pressure will deteriorate.
*When using a wallmount bracket, IP value is 23 even with a mount rubber.

## Dimensions (mm)

RH-A model

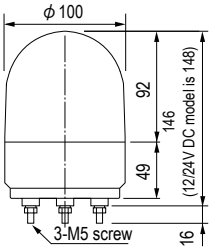


12V, 24V specification includes a wire. (UL1430 AWG20 cord outlet is 240±30mm)

Installation Dimension Drawings

*Position differs on the UL model

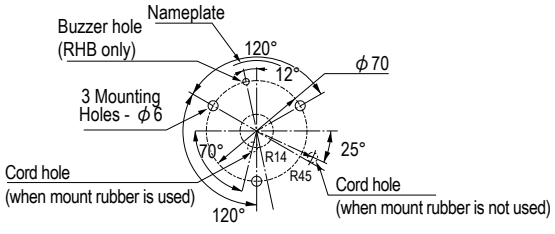


*The applicable crimp terminal has a thread hole diameter of 3 mm External shape may be used up to ϕ 8mm.

# SKH-A



SKH-A model
SKHB-A model (with electronic buzzer)

Sound pressure 90dB | IP23 (For watercraft, IP54) | CE (12V, 24V only)* | 118ϕ

*SKH-102AAC excluding SKHB-24AAC

| | |
|---|---|
| Colors | Red, Amber, Green, Blue, Purple |
| Globe | The material is AS resin, which is translucent and highly weather resistant. |

The SKH Series features an 118mm diameter, built-in 90dB audible alarm, and automobile incandescent bulbs as a light source for high vibration resistance, ideal for moving vehicles.

· Automobile incandescent bulbs for high vibration resistance
- Built-in 90dB audible alarm
· Available colors: Red, Amber, Green, Blue

## Specifications

| Model | | Rated Voltage | Power current | | Number of flashes | Bulb | | Mass |
|---|---|---|---|---|---|---|---|---|
| SKH model | SKHB model | | SKH model | SKHB model | | | Number | |
| **SKH-101A** | **SKHB-12A** | 12V DC | 0.8A | 0.85A | 170/minute | 12V 10W | 9 | 0.4kg |
| **SKH-102A** | **SKHB-24A** | 24V DC | 0.5A | 0.55A | | 24V 10W | 10 | |
| **SKH-110A** | **SKHB-100A** | 100V AC | 0.065A | 0.115A | | 12V 5W | 12 | 0.6kg |
| **SKH-120A** | **SKHB-200A** | 200V AC | 0.030A | 0.080A | | | | |
| **SKH-102AAC** | **SKHB-24AAC** | 24V AC | 0.5A | 0.55A | | 24V 10W | 10 | 0.4kg |
| Boats only **SKH-102SA** | | — | 24V DC | 0.5A | — | 170/minute | 24V 10W | 10 | 0.4kg |
| Boats only **SKH-110SA** | | — | 100V AC | 0.065A | — | | 12V 5W | 12 | 0.6kg |

Bulb Shape Glass Bulb G18, Base BA15S

| Light bulb No. | Model |
|---|---|
| 9 | D01201003A-F1 |
| 10 | D02401003A-F1 |
| 12 | D01200503A-F1 |

* Light bulbs come in packs of 10.
* Stock for some light bulbs may be limited, as products become discontinued. We ask for your understanding in this regard.

## Model Code

**SKHB-100A-R**

Model
SKH

Specifications

| | |
|---|---|
| Blank | Revolving Light |
| B | Revolving light with buzzer |

Rated Voltage

| | SKH | SKHB | SKH (exclusively for watercraft) |
|---|---|---|---|
| 12V DC | 101A | 12A | – |
| 24V DC | 102A | 24A | 102SA |
| 24V AC | 102AAC | 24AAC | – |
| 100V AC | 110A | 100A | 110SA |
| 200V AC | 120A | 200A | – |

Colors

| | |
|---|---|
| R | Red |
| Y | Amber |
| G | Green |
| B | Blue |
| P | Purple |

## Dimensions (mm)

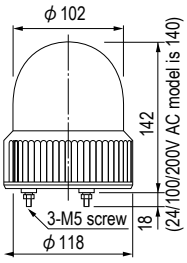


### Installation Dimension Drawings

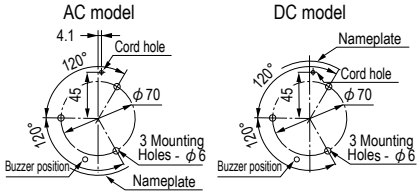


*lease be careful, as the position of the name plate against the installation surface changes according to how the globe is fastened.
*To pass a 100V outlet, a ϕ 30 cord hole is required.

Nominal Cross-sectional Area : Wire Type: Lead Line Length
SKH-101A,102A,102AAC
0.5mm² : AV : 300

SKHB-12A,24A,24AAC
0.5mm² : AV : 300

SKH-110A (with plug), 120A
0.75mm² : VCTFK : 310

SKHB-100A (with plug), 200A
0.75mm² : VCTKF : 310
(Signal Wire : 0.5mm² : AV : 300)

*Please send inquiries for the size of watercraft specifications (SKH-SA type).

## Optional Parts

For details, see pages 182 to 187.

| Optional Parts | Model |
|---|---|
| Wallmount Bracket | SZ-007 |

## Wiring Diagram

DC model

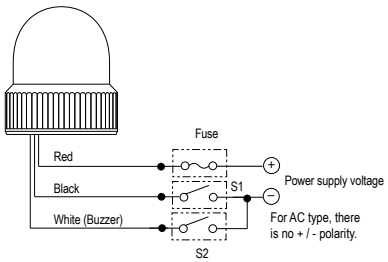


| Contact S1 | Contact S2 | Description |
|---|---|---|
| ON | OFF | Revolving Light |
| OFF | ON | Buzzer |
| ON | ON | Revolving light & buzzer |

*Wiring diagram is for model B.
There is no white wire for units without a buzzer.

AC model (100V AC)

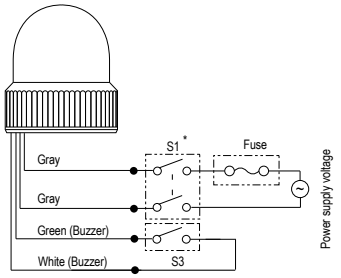


| Contact S3 | Description |
|---|---|
| OFF | Revolving Light |
| ON | Revolving light & buzzer |

* Wiring diagram is for model B.
There are no white and green wires for units without a buzzer.
Buzzer contact open circuit voltage 12V DC Short circuit current 40mA

AC model (200V AC)

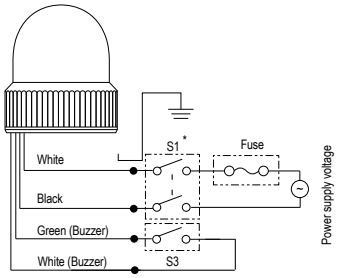


| Contact S3 | Description |
|---|---|
| OFF | Revolving Light |
| ON | Revolving light & buzzer |

* Wiring diagram is for model B.
There are no white and green wires for units without a buzzer.
Buzzer contact open circuit voltage 12V DC Short circuit current 40mA

*In addition to a two-way switch, you can also use a one-way switch.

# WH-A



WH-A model
WHB-A model
Round Globe

| | |
|---|---|
| Colors | Red, Amber, Green, Blue |
| Globe | Polycarbonate resin with superb shock resistance and heat resistance |
| Body | ABS resin |

The WH Series features an 100mm diameter, side wall-mount design, built-in 90dB audible alarm, and automobile incandescent bulbs as a light source for high vibration resistance.

· Automobile incandescent bulbs for high vibration resistance
- Built-in 90dB audible alarm
- Built-in terminal block for easy wiring
· IP54 rating for dust and water resistance
· Available colors: Amber, Blue

Sound pressure 90dB | IP54 (Product with a buzzer is IP23) | CE | 100ϕ (24V only)

## Specifications

### WH-A model

| | Model | Rated Voltage | Current Consumption | Number of flashes | Bulb | Number | Mass |
|---|---|---|---|---|---|---|---|
| | WH-A | | | | | | |
| Without buzzer | **WH-24A** | 24V DC | 0.5A | 170/minute | 24V 10W | 10 | 0.55kg |
| | **WH-100A** | 100V AC | 0.065A | | 12V 5W | 12 | 0.75kg |
| | **WH-200A** | 200V AC | 0.03A | | | | |
| With buzzer | **WHB-24A** | 24V DC | 0.55A | | 24V 10W | 10 | 0.55kg |
| | **WHB-100A** | 100V AC | 0.115A | | 12V 5W | 12 | 0.75kg |
| | **WHB-200A** | 200V AC | 0.08A | | | | |

Bulb Shape Glass Bulb G18, Base BA15S

| Light bulb No. | Model |
|---|---|
| 10 | D02401003A-F1 |
| 12 | D01200503A-F1 |

*Light bulbs come in packs of 10.
*Stock for some light bulbs may be limited, as products become discontinued. We ask for your understanding in this regard.

## Dimensions (mm)

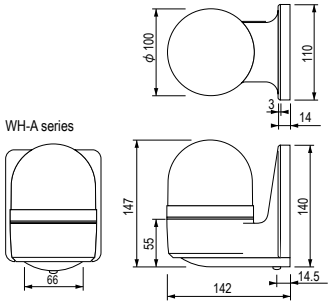


Installation Dimension Drawings

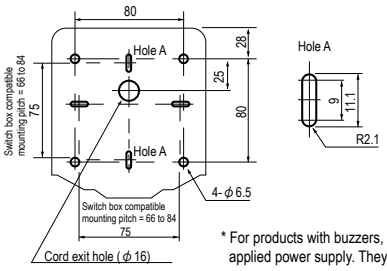


* For products with buzzers, the revolving light and buzzer work simultaneously with the applied power supply. They cannot be controlled separately.

## Wiring Diagram

WH-A model
WHB-A model

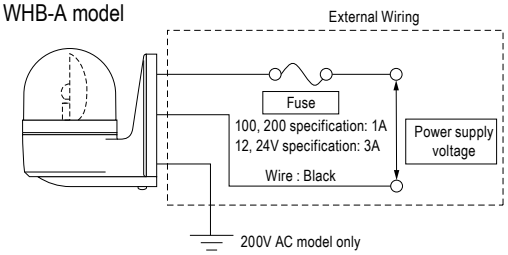

# SKH-EA

IP23 CE (12V, 24V only) 100φ

| | |
|---|---|
| Colors | Red, Amber, Green, Blue |
| Globe | The material is AS resin, which is translucent and highly weather resistant. |

The SKH Series features an 100mm diameter, durable body design, and automobile incandescent bulbs as a light source for high vibration resistance, ideal for moving vehicles.

· Automobile incandescent bulbs for high vibration resistance
- Durable, weather-resistant metal and acrylic body structure
- Comes in multiple voltage types
· Available colors: Red, Amber, Green, Blue

## Specifications

| Model | Rated Voltage | Current Consumption | Number of flashes | Bulb | Number | Mass |
|---|---|---|---|---|---|---|
| **SKH-12EA** | 12V DC | 0.8A | 170/minute | 12V 10W | 9 | 0.4kg |
| **SKH-24EA** | 24V DC | 0.5A | | 24V 10W | 10 | |
| **SKH-100EA** | 100V AC | 0.065A | | 12V 5W | 12 | 0.6kg |
| **SKH-200EA** | 200V AC | 0.03A | | | | |

Bulb Shape Glass Bulb G18, Base BA15S

| Light bulb No. | Model |
|---|---|
| 9 | D01201003A-F1 |
| 10 | D02401003A-F1 |
| 12 | D01200503A-F1 |

* Light bulbs come in packs of 10.
* Stock for some light bulbs may be limited, as products become discontinued. We ask for your understanding in this regard.

## Optional Parts

For details, see pages 182 to 187.

| Optional Parts | Model |
|---|---|
| Wallmount Bracket | SZ-007 |

## Dimensions (mm)

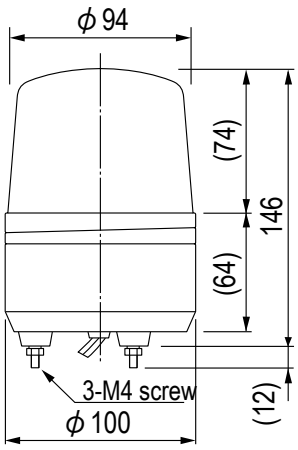


Installation Dimension Drawings

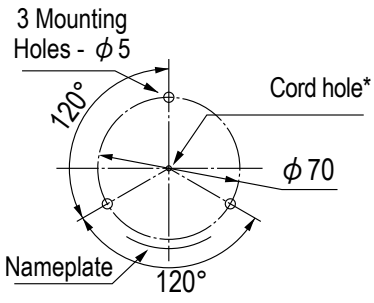


*To pass a 100V outlet, a φ 30 cord hole is required.

Nominal Cross-sectional Area : Wire Type: Lead Line Length

SKH-12EA,24EA
0.5mm² : AV : 300
SKH-100EA (with plug), 200EA
0.75mm² : VCTFK : 330

Medium Revolving Warning Light

# SKP-A

| | |
|---|---|
| Colors | Red, Amber, Green, Blue |
| Globe | Melanine with superb shock resistance and heat resistance |

The SKP Series features an 138mm diameter and automobile incandescent bulbs as a light source for high vibration resistance, ideal for moving vehicles.

· Automobile incandescent bulbs for high vibration resistance
- Silent and stable light rotation system
· Weather resistant and corrosion proof body design
· Available colors: Red, Amber, Green, Blue

IP23 CE 138ϕ

(12V, 24V only)*
*excludes SKP-104A

## Specifications

| Model | Rated Voltage | Current Consumption | Number of flashes | Bulb | Number | Mass |
|---|---|---|---|---|---|---|
| **SKP-101A** | 12V DC | 2.6A | 140/minute | 12V 35W | 1 | 0.8kg |
| **SKP-102A** | 24V DC | 1.2A | | 24V 35W | 2 | |
| **SKP-104A** | 48V DC | 0.8A | | 48V 35W | 5 | 0.9kg |
| **SKP-110A** | 100V AC | 0.3A | | 120V 40W | 36 | 1.0kg |
| **SKP-120A** | 200V AC | 0.13A | 120/minute | 220V 30W | 37 | |

Light bulb shape… 12V/24V / Glass ball RP35 base BA15S 48V/100V/200V / Glass ball RP35 base BA15D

| Light bulb No. | Model |
|---|---|
| 1 | D01203501-F1 |
| 2 | D02403501-F1 |
| 5 | D04803502-F1 |

| Light bulb No. | Model |
|---|---|
| 36 | D12004024-F1 |
| 37 | D22003024-F1 |

*Light bulbs come in packs of 10.
*Stock for some light bulbs may be limited, as products become discontinued. We ask for your understanding in this regard.

## Optional Parts

For details, see pages 182 to 187.

| Optional Parts | Model |
|---|---|
| Rubber cover that is compliant with external projection | SKP-001 |
| Wallmount Bracket | SZ-023 |
| Wallmount Bracket | SZ-008 |

*Only SKP-101A will be compliant with external projection regulation using the SKP-001 model.

## Dimensions (mm)

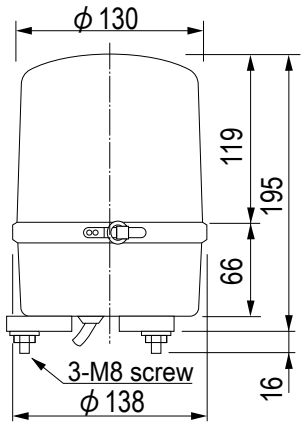


Installation Dimension Drawings

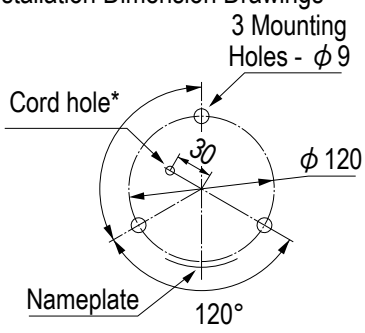


*To pass a 100V outlet, a ϕ35 or bigger cord hole is required.

Nominal Cross-sectional Area : Wire Type: Lead Line Length

SKP-101A,102A,104A
1.25mm² : AVS : 270
SKP-110A (with plug)
0.75mm² : VCT : 330
SKP-120A
0.75mm² : VCT : 330

## Medium Revolving Warning Light

# KP-A

IP23 CE 162φ

(only 24V)

| | |
|---|---|
| Colors | Red, Amber, Green, Blue |
| Globe | The material is AS resin, which is translucent and highly weather resistant. |

The KP Series features an 162mm diameter, splash resistant body design, and automobile incandescent bulbs as a light source for high vibration resistance, ideal for moving vehicles.

· Automobile incandescent bulbs for high vibration resistance
· Weather resistant and corrosion proof body design
- Able to operate in temperatures as low as -30
· Available colors: Red, Amber, Green, Blue

## Specifications

| Model | Rated Voltage | Current Consumption | Number of flashes | Bulb | Number | Mass |
|---|---|---|---|---|---|---|
| **KP-24A** | 24V DC | 1.2A | 140/minute | 24V 35W | 2 | 1.0kg |
| **KP-100A** | 100V AC | 0.3A | | 120V 40W | 36 | 1.2kg |
| **KP-200A** | 200V AC | 0.13A | 120/minute | 220V 30W | 37 | 1.2kg |

Light bulb form... 24V / Glass ball RP35 base BA15S 100V/200V Glass ball RP35 base BA15D

| Light bulb No. | Model |
|---|---|
| 2 | D02403501-F1 |
| 36 | D12004024-F1 |

| Light bulb No. | Model |
|---|---|
| 37 | D22003024-F1 |

*Light bulbs come in packs of 10.
*Stock for some light bulbs may be limited, as products become discontinued. We ask for your understanding in this regard.

## Optional Parts

For details, see pages 182 to 187.

| Optional Parts | Model |
|---|---|
| Wallmount Bracket | SZ-023 |
| Wallmount Bracket | SZ-008 |

## Dimensions (mm)

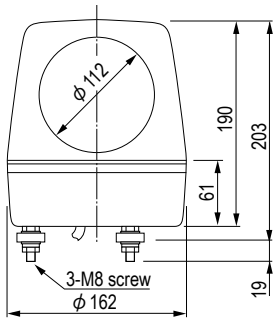


Installation Dimension Drawings

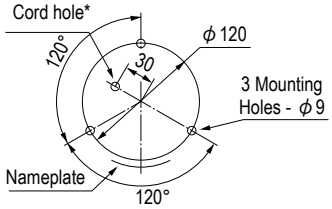


Nominal Cross-sectional Area : Wire Type: Lead Line Length

KP-24A
0.75mm² : VCT : 330
KP-100A (with plug)
0.75mm² : VCT : 330
KP-200A
0.75mm² : VCT : 330

*To pass a 100V outlet, a φ35 cord hole is required.

## Large Revolving Warning Light

# SKL-A

SKL-CA model
SKL-SA model (stainless steel)

IP23 CE 162φ

(12V, 24V only)

| | |
|---|---|
| Colors | Red, Amber, Green *, Blue* |
| Globe | Polycarbonate resin with superb shock resistance and heat resistance |
| Body | CA type: Steel plate (Coating) SA type: Non-rusting stainless steel (SUS 304) |

The SKL Series features an 162mm diameter, comes in multiple voltage types, and automobile incandescent bulbs as a light source for high vibration resistance, ideal for moving vehicles.

· Automobile incandescent bulbs for high vibration resistance
· Weather resistant and corrosion proof body design
· Available colors: Red, Amber, Green, Blue

## Specifications

| Model | Rated Voltage | Current Consumption | Number of flashes | Bulb | Number | Mass |
|---|---|---|---|---|---|---|
| **SKL-101CA** | 12V DC | 2.6A | 140/minute | 12V 35W | 1 | 1.3kg |
| **SKL-101SA** | | | | | | |
| **SKL-102CA** | 24V DC | 1.2A | | 24V 35W | 2 | |
| **SKL-102SA** | | | | | | |
| **SKL-104CA** | 48V DC | 0.8A | | 48V 35W | 5 | 1.4kg |
| **SKL-110CA** | 100V AC | 0.3A | | 120V 40W | 36 | 1.5kg |
| **SKL-110SA** | | | | | | |
| **SKL-120CA** | 200V AC | 0.13A | 120/minute | 220V 30W | 37 | |
| **SKL-120SA** | | | | | | |
| **SKL-102ACSA** | 24V AC | 1.2A | 140/minute | 24V 35W | 2 | 1.4kg |

Light bulb shape... 12V/24V / Glass ball RP35 base BA15S
1 2 48V/100V/200V / Glass ball RP35 base BA15D
5

| Light bulb No. | Model |
|---|---|
| | D01203501-F1 |
| | D02403501-F1 |
| | D04803502-F1 |

| Light bulb No. | Model |
|---|---|
| 36 | D12004024-F1 |
| 37 | D22003024-F1 |

*Light bulbs come in packs of 10.
*Stock for some light bulbs may be limited, as products become discontinued. We ask for your understanding in this regard.

## Optional Parts

For details, see pages 182 to 187.

| Optional Parts | Model |
|---|---|
| Rubber cover that is compliant with external projection | HKM-001 |
| Wallmount Bracket | SZ-023 |
| Wallmount Bracket | SZ-008 |

*Using HKM-001, only SKL-101□A is compliant with external projection regulations.

## Dimensions (mm)

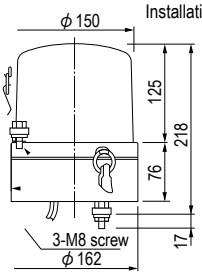


Installation Dimension Drawings

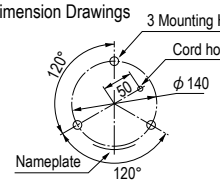


*To pass a 100V outlet, a φ35 cord hole is required.

Nominal Cross-sectional Area : Wire Type: Lead Line Length

SKL-101CA,102CA,104CA,SKL-101SA,102SA 1.25mm² : AVS : 270
SKL-110CA,SKL-110SA (with plug) 0.75mm² : VCT : 330
SKL-120CA,SKL-120SA 0.75mm² : VCT : 330

# SKC-A

IP23 CE 187φ
(12V, 24V only)

| | |
|---|---|
| Colors | Red, Amber, Blue, Green |
| Globe | The material is AS resin, which is translucent and highly weather resistant. |

The SKC Series features an 187mm diameter, comes in multiple voltage types, and automobile incandescent bulbs as a light source for high vibration resistance, ideal for moving vehicles.

- Belt-drive rotation system for silent and stable signaling
- Weather resistant and corrosion proof body design
- Available colors: Red, Amber, Green, Blue

## Specifications

| Model | Rated Voltage | Current Consumption | Number of flashes | Bulb | Number | Mass |
|---|---|---|---|---|---|---|
| **SKC-201A** | 12V DC | 2.6A | 200/minute | 12V 35W | 1 | 1.6kg |
| **SKC-202A** | 24V DC | 1.2A | | 24V 35W | 2 | |
| **SKC-210A** | 100V AC | 0.4A | | 120V 40W | 36 | 1.8kg |
| **SKC-220A** | 200V AC | 0.2A | 160/minute | 220V 30W | 37 | |

Light bulb shape... 12V/24V / Glass ball RP35 base BA15S 100V/200V Glass bulb RP35 Base BA15D

| Light bulb No. | Model |
|---|---|
| 1 | D01203501-F1 |
| 2 | D02403501-F1 |

| Light bulb No. | Model |
|---|---|
| 36 | D12004024-F1 |
| 37 | D22003024-F1 |

*Light bulbs come in packs of 10.
*Stock for some light bulbs may be limited, as products become discontinued. We ask for your understanding in this regard.

## Optional Parts

For details, see pages 182 to 187.

| Optional Parts | Model |
|---|---|
| Wallmount Bracket | SZ-008 |

## Dimensions (mm)

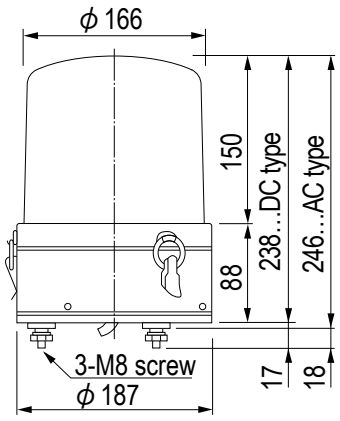


Installation Dimension Drawings

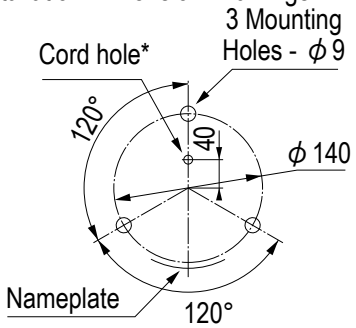


*To pass a 100V outlet, a φ 35 cord hole is required.

Nominal Cross-sectional Area: Wire Type: Lead Line Length

SKC-201A,202A
1.25mm² : AVS : 250
SKC-210A (with plug)
0.75mm² : VCT : 330
SKC-220A
0.75mm² : VCT : 330

# HP

IP23 186ϕ

| | |
|---|---|
| Colors | Red, Amber, Blue |
| Globe | The material is AS resin, which is translucent and highly weather resistant. |
| Body | ABS resin |

The HP Series features an 186mm diameter, comes in multiple voltage types, and halogen bulbs as a light source.

· Halogen bulb light source; more efficient than incandescent bulb types
· Durable, weather resistant, ABS structure
· Available colors: Red, Amber, Blue

## Specifications

| Model | Rated Voltage | Halogen Bulb<br>Bulb sold seperately | Flash Rate (fpm) | Mass |
|---|---|---|---|---|
| **HP-12** | 12V/24V DC | 0.5A | 160 | 1.0kg |
| **HP-24** | | | | |

## Model Code

**HP-□-□**

Model
HP

Rated Voltage

| | |
|---|---|
| 12 | 12V DC |
| 24 | 24V DC |

Colors

| | |
|---|---|
| R | Red |
| Y | Amber |
| B | Blue |

## Dimensions (mm)

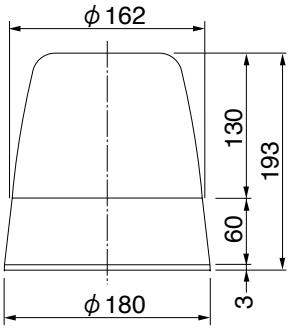


Mounting Dimensions

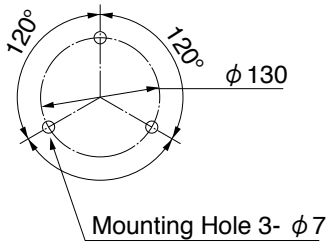

# KG

IP23 186φ

| | |
|---|---|
| Colors | Red (KG-100 model only) Amber |
| Globe | A polystyrene resin * that has superior weather resistance and translucency. |

The KG Series features an 186mm diameter and comes in multiple voltage types, and incandescent bulbs as a light source.

· Belt-drive rotation system for silent and stable signaling
- Large, 2-sided reflecting mirror for intense rotating light flashing
· Weather resistant and corrosion proof body design
· Available colors: Red, Amber

## Specifications

| Model | Rated Voltage | Current Consumption | Number of flashes | Light bulb | Number | Mass |
|---|---|---|---|---|---|---|
| **KG-12** | 12V DC | 2.7A | 180/minute | 12V 35W | 1 | 0.7kg |
| **KG-24** | 24V DC | 1.2A | | 24V 35W | 2 | |
| **KG-100** | 100V AC | 0.32A | | 120V 40W | 36 | 0.9kg |

Light bulb shape... 12V/24V / Glass ball RP35 Base BA15S 100V Glass ball RP35 Base BA15D

| Light bulb No. | Model |
|---|---|
| 1 | D01203501-F1 |
| 2 | D02403501-F1 |
| 36 | D12004024-F1 |

*Light bulbs come in packs of 10.
*Stock for some light bulbs may be limited, as products become discontinued.

We ask for your understanding in this regard.

## Optional Parts

For details, see pages 182 to 187.

| Optional Parts | Model |
|---|---|
| Wallmount Bracket | SZ-023 |
| Wallmount Bracket | SZ-008 |

## Dimensions (mm)

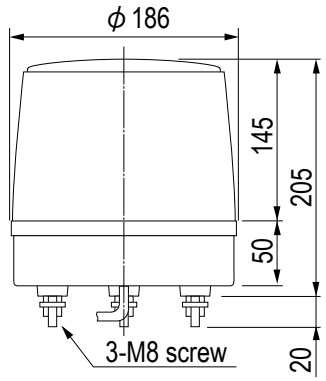


Installation Dimension Drawings

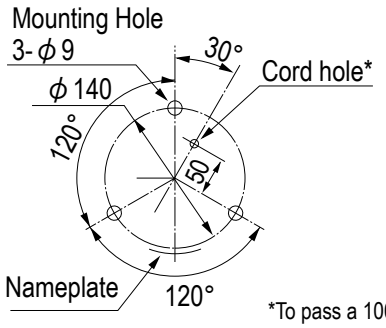


*To pass a 100V outlet, a φ 30 or bigger cord hole is required.

Nominal Cross-sectional Area : Wire Type: Lead Line Length

KG-12/24 : 1.75mm² : AV : 230
KG-100 (with plug): 0.75mm² : VCT : 450

# Cube Tower

| Page number | Page 131 | | | Page 133 | | | | Page 135 | | |
|---|---|---|---|---|---|---|---|---|---|---|
| Model Name | Small LED Cube Tower | | | Small Cube Tower | | | | Cube Tower | | |
| Model | **KES** | | | **KJS** | | | | **KJ** | | |
| Product image | | | | | | | | | | |
| Rated Voltage | 24V DC | 100V AC | 220V AC | 12V DC | 24V DC | 100V AC | 220V AC | 24V DC | 100V AC | 220V AC |
| Size (mm) | ☐82 | | | ☐82 | | | | ☐116 | | |
| IP | 23 | | | 23 | | | | 23 | | |
| Buzzer sound pressure in dB (at a distance of 1m) | 85 | | | 85 | | | | 85 | | |
| Body | ABS | | | ABS | | | | ABS | | |
| Globe | AS | | | AS | | | | AS | | |
| Light Source | LED | | | Light bulb (with spare light bulb) | | | | Light bulb (with spare light bulb) | | |
| Open collector | NPN | | | NPN | | | | | | |

* For specifications, see the product page.

# KES



KES type
KESB type <with buzzer>

Sound pressure 85dB | IP23 | 82mm

| | |
|---|---|
| Colors | Red, Amber, Green |
| Globe | The material is AS resin, which is translucent and highly weather resistant. |
| Volume | Maximum 85dB (at 1m) (volume not adjustable) |

The KES Series features an 82mm width, maintenance-free LEDs, and a rotating motor for enhanced signaling.

· Built-in 85dB audible alarm
- Built-in, motor-based, rotating LED light
· Weather resistant body design
- NPN type
· Available colors: Red, Amber, Green

●Standard Colors:
1-Tier model / Red (-R), Amber (-Y), Green (-G)
2-Tier model / Red-Amber (-RY), Red-Green (-RG)
3-Tier model / Red-Amber-Green (-RYG)

## Specification

| Number of tiers | Model | Rated Voltage | Power Consumption | |
|---|---|---|---|---|
| | | | KES type | KESB type |
| 1-Tier model | **KES-102** | 24V DC | 6.5W | 7.5W |
| | **KESB-102** | | | |
| | **KES/KESB-110** | 100V AC | 6.4W | 7.3W |
| | **KES/KESB-120** | 220V AC | | |
| 2-Tier model | **KES/KESB-202** | 24V DC | 13.0W | 13.0W |
| | **KES/KESB-210** | 100V AC | 10.5W | 11.0W |
| | **KES/KESB-220** | 220V AC | | |
| 3-Tier model | **KES/KESB-302** | 24V DC | 19.5W | 19.5W |
| | **KES/KESB-310** | 100V AC | 14.0W | 15.0W |
| | **KES/KESB-320** | 220V AC | | |

Number of flashes・・・100/min

## Model Code

**KESB-302-RYG**

Model
Specification

| | |
|---|---|
| Blank | Without buzzer |
| B | With buzzer |

Number of tiers

Rated Voltage

| | |
|---|---|
| 02 | 24V DC |
| 10 | 100V AC |
| 20 | 220V AC |

Colors

| | |
|---|---|
| R | Red |
| Y | Amber |
| G | Green |

From Top to Bottom

## Optional Parts

For details, see pages 182 to 187.

| Optional Parts | Model |
|---|---|
| Wallmount Bracket | SZ-007 |

## Dimensions (mm)

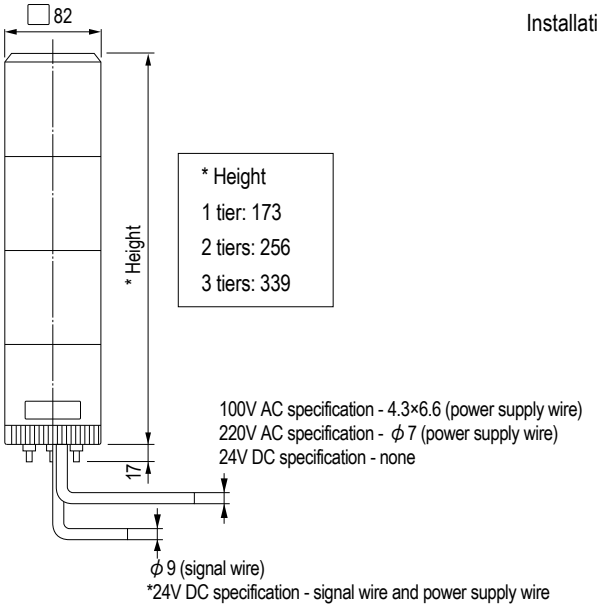


Installation Dimension Drawings

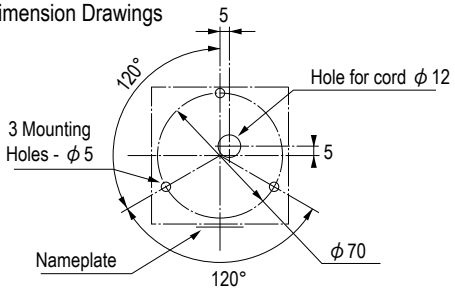


## Wiring Diagram

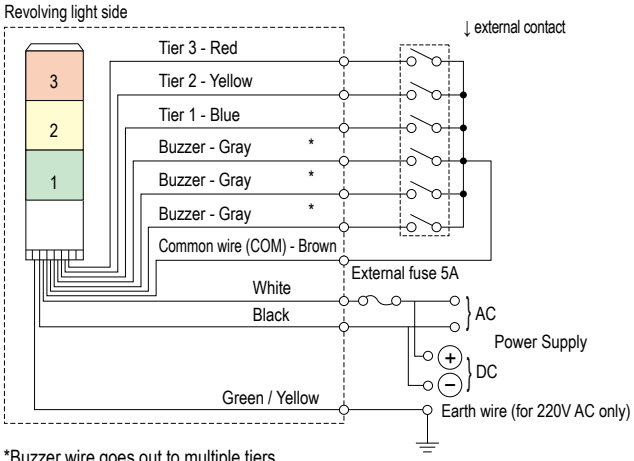


*Buzzer wire goes out to multiple tiers.
*Only 1 buzzer sound. (continuous beep sound)
*Customer cannot change the color scheme or increase/decrease tiers.
*KES does not have a buzzer (Gray) wire.
*When finished wiring, please be sure to insulate the tip of the unused wire with insulation tape.

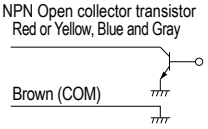


Transistor Capacity (Recommended)
(NPN)

| Model | KES (KESB) |
|---|---|
| Current Capacity | Ic≧50mA (Ic≧300mA) |
| Withstand Voltage | Vc≧45V |

■Signal wire current and contact capacity per tier

| Voltage | Revolving light wire current | Buzzer wire current | Revolving light wire contact capacity | Buzzer wire contact capacity |
|---|---|---|---|---|
| 24V DC<br>100V AC<br>220V AC | 34mA | 80mA | 50mA or more | 300mA or more |

Nominal Cross-sectional Area : Wire Type: Wire Length

Signal wire AWG22 : UL1007 : 250mm
24V DC power supply wire AWG20 : UL1007 : 280mm
AC100V power supply wire 0.75mm$^2$ : VCTFK : 280mm
AC220V power supply wire 0.75mm$^2$ : VCTF : 280mm

# KJS



KJS type
KJSB type <with buzzer>

Sound pressure 85dB | IP23 | 82mm

| | |
|---|---|
| Colors | Red, Amber, Green, Blue |
| Globe | The material is AS resin, which is translucent and highly weather resistant. |
| Volume | Maximum 85dB (at 1m) (volume not adjustable) |

The KJS Series features an 82mm width, a built-in 85dB audible alarm, and incandescent bulbs as the light source.

· Built-in 85dB audible alarm
- Light flash rate of 160 per minute
· Weather resistant body design
- NPN type
- Comes in multiple voltages
· Available colors: Red, Amber, Green, Blue

● Standard Colors:
Single-tier type/red (-R), yellow (-Y), green (-G), blue (-B)
2-Tier model / Red-Amber (-RY), Red-Green (-RG)
3-Tier model / Red-Amber-Green (-RYG)

## Specification

| Number of tiers | Model | Rated Voltage | Power Consumption | | Bulb | |
|---|---|---|---|---|---|---|
| | | | KJS type | KJSB type | | Number |
| 1-Tier model | **KJS(B)-101** | 12V DC | Max.5.8W | Max.6.1W | 12V 10W | 9 |
| | **KJS(B)-102** | 24V DC | Max.13.3W | Max.14.4W | 24V 10W | 10 |
| | **KJS(B)-110** | 100V AC | Max.9.0W | Max.9.5W | 12V 5W | 12 |
| | **KJS(B)-120** | 220V AC | | | | |
| 2-Tier model | **KJS(B)-201** | 12V DC | Max.11.5W | Max.11.9W | 12V 10W | 9 |
| | **KJS(B)-202** | 24V DC | Max.26.5W | Max.27.6W | 24V 10W | 10 |
| | **KJS(B)-210** | 100V AC | Max.17.2W | Max.17.8W | 12V 5W | 12 |
| | **KJS(B)-220** | 220V AC | | | | |
| 3-Tier model | **KJS-301** | 12V DC | Max.17.3W | Max.17.6W | 12V 10W | 9 |
| | **KJS-302** | 24V DC | Max.39.7W | Max.40.9W | 24V 10W | 10 |
| | **KJS(B)-310** | 100V AC | Max.25.8W | Max.26.4W | 12V 5W | 12 |
| | **KJS(B)-320** | 220V AC | | | | |

*●Standard stock products do not have a buzzer.
Bulb Shape · · ·glass bulb G18; base BA15S; number of flashes · · ·160/min

## Model Code

**KJSB-302-RYG**

Model
Specification

| | |
|---|---|
| Blank | Without buzzer |
| B | With buzzer |

Number of tiers

Rated Voltage

| | |
|---|---|
| 01 | 12V DC |
| 02 | 24V DC |
| 10 | 100V AC |
| 20 | 220V AC |

Colors

| | |
|---|---|
| R | Red |
| Y | Amber |
| G | Green |
| B | Blue |

From Top to Bottom

## Optional Parts

For details, see pages 182 to 187.

| Optional Parts | Model |
|---|---|
| Wallmount Bracket | SZ-007 |

| Light bulb No. | Model |
|---|---|
| 9 | D01201003A-F1 |
| 10 | D02401003A-F1 |
| 12 | D01200503A-F1 |

*Light bulbs come in packs of 10.
*Stock for some light bulbs may be limited, as products become discontinued.
We ask for your understanding in this regard.

## Dimensions (mm)

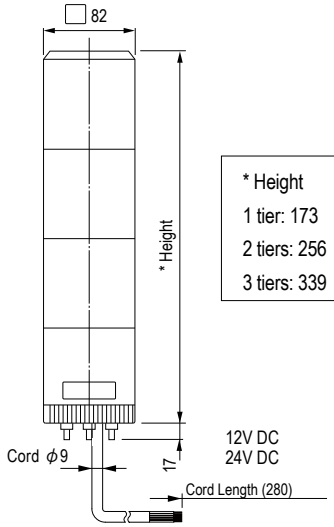


* Height
1 tier: 173
2 tiers: 256
3 tiers: 339

Installation Dimension Drawings

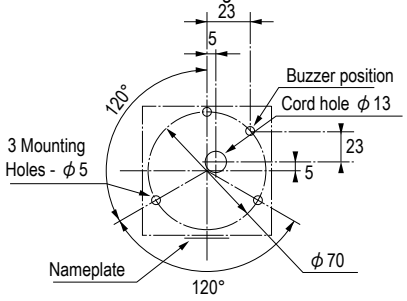


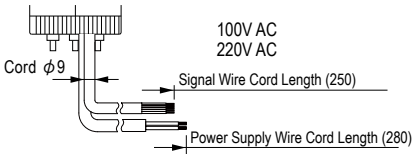


## Wiring Diagram

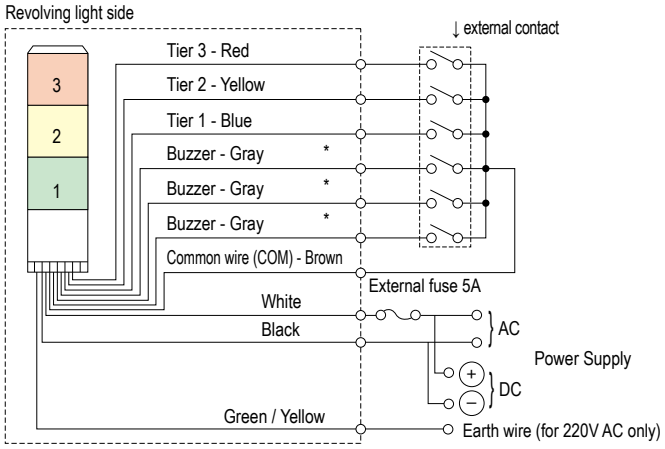


*Buzzer wire goes out to multiple tiers.
*Only 1 buzzer sound. (continuous beep sound)
*Customer cannot increase/decrease tiers.
*KJS does not have a buzzer (Gray) wire.
*When finished wiring, please be sure to insulate the tip of the unused wire with insulation tape.

NPN Open collector transistor

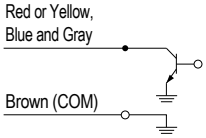


Transistor capacity (recommended) (NPN)

| Model | KJS (KJSB) |
|---|---|
| Current Capacity | Ic≧50mA (Ic≧300mA) |
| Withstand Voltage | Vc≧45V |

■Signal wire current and contact capacity per tier

| Voltage | Revolving light wire current | Buzzer wire current | Revolving light wire contact capacity | Buzzer wire contact capacity |
|---|---|---|---|---|
| 12V DC | 34mA | 80mA | 50mA or more | 300mA or more |
| 24V DC | | | | |
| 100V AC | | | | |
| 220V AC | | | | |

Nominal Cross-sectional Area : Wire Type : Wire Length
12/24V DC power supply wire 0.5mm² : UL1007 : 280mm
100V AC power supply wire 0.75mm² : VCTFK : 280mm
220V AC power wire 0.75mm² : VCTF : 280mm

# KJ

KJ type
KJB type <with buzzer>

Sound pressure 85dB | IP23 | 116mm

| | |
|---|---|
| Colors | Red, Amber, Green, Blue |
| Globe | The material is AS resin, which is translucent and highly weather resistant. |
| Volume | Maximum 85dB (at 1m) (volume adjustable within 70-85dB (at 1m)) |

The KJS Series features an 116mm width, a built-in 85dB audible alarm, and incandescent bulbs as the light source.

· Built-in 85dB audible alarm
- Light flash rate of 160 per minute
· Weather resistant body design
- Comes in multiple voltages
· Available colors: Red, Amber, Green, Blue

● Standard Colors:
Single-tier type/Red (-R), Amber (-Y), Green (-G), Blue (-B)
2-Tier model / Red-Amber (-RY), Red-Green (-RG)
3-Tier model / Red-Amber-Green (-RYG)
4-Tier model / Red-Amber-Green-Blue (-RYGB)

## Specification

| Number of tiers | Model | Rated Voltage | Power Consumption | | Bulb | |
|---|---|---|---|---|---|---|
| | | | KJ type | KJB type | | Number |
| 1-Tier model | **KJ(B)-102** | 24V DC | Max.13.3W | Max.13.9W | 24V 10W | 10 |
| | **KJ(B)-110** | 100V AC | Max.7.5W | Max.7.8W | 12V 5W | 12 |
| | **KJ(B)-120** | 220V AC | | | | |
| 2-Tier model | **KJ(B)-202** | 24V DC | Max.26.6W | Max.27.2W | 24V 10W | 10 |
| | **KJ(B)-210** | 100V AC | Max.12.5W | Max.12.9W | 12V 5W | 12 |
| | **KJ(B)-220** | 220V AC | | | | |
| 3-Tier model | **KJ(B)-302** | 24V DC | Max.40.0W | Max.40.6W | 24V 10W | 10 |
| | **KJ(B)-310** | 100V AC | Max.17.3W | Max.17.7W | 12V 5W | 12 |
| | **KJ(B)-320** | 220V AC | | | | |
| 4-Tier model | **KJ(B)-402** | 24V DC | Max.53.3W | Max.53.9W | 24V 10W | 10 |
| | **KJ(B)-410** | 100V AC | Max.22.1W | Max.22.5W | 12V 5W | 12 |
| | **KJ(B)-420** | 220V AC | | | | |

Bulb Shape・・・glass bulb G18; base BA15S; number of flashes・・・130/min

## Model Code

**KJB-420-RYGB**

Model
Specification

| | |
|---|---|
| Blank | Revolving light |
| B | with buzzer |

Number of tiers

Rated Voltage

| | |
|---|---|
| 02 | 24V DC |
| 10 | 100V AC |
| 20 | 220V AC |

Colors
From Top to Bottom

| | |
|---|---|
| R | Red |
| Y | Amber |
| G | Green |
| B | Blue |

## Optional Parts

For details, see pages 182 to 187.

| Optional Parts | Model |
|---|---|
| Wallmount Bracket | SZ-023 |
| Wallmount Bracket | SZ-008 |

| Light bulb No. | Model |
|---|---|
| 10 | D02401003A-F1 |
| 12 | D01200503A-F1 |

*Light bulbs come in packs of 10.
*Stock for some light bulbs may be limited, as products become discontinued.
We ask for your understanding in this regard.

## Dimensions (mm)

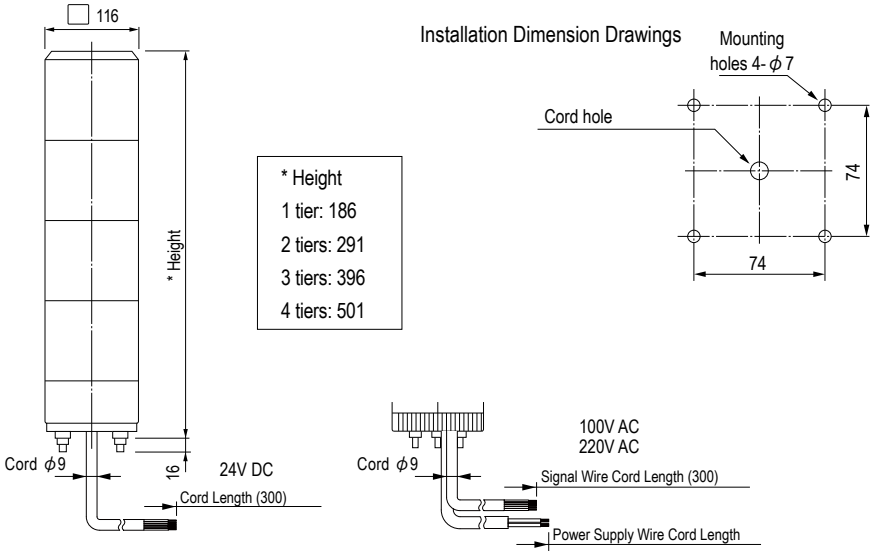


## Wiring Diagram

KJ/KJB type (100V AC, 220V AC)
Revolving light side

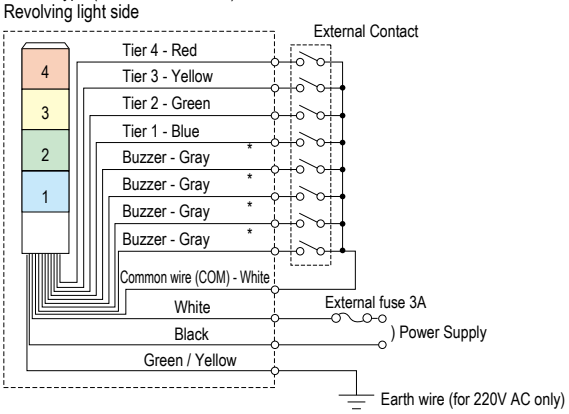


*Buzzer wire goes out to multiple tiers.
*Only 1 buzzer sound. (continuous beep sound)
*Customer cannot increase/decrease tiers.
*KJ does not have a buzzer (Gray) wire.
*When finished wiring, please be sure to insulate the tip of the unused wire with insulation tape.
*KJ single-tier type (100V AC, 220V AC) has driving power supply. (Has power supply wire only; no signal wire)

KJ/KJB type (24V DC)
Revolving light side

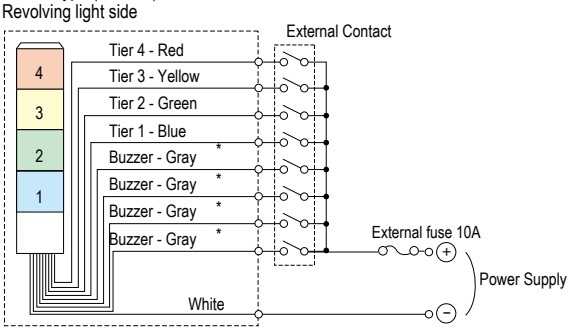


■Signal wire current and contact capacity per tier

| Voltage | Signal Wire Current | Inrush Current | External Contact Capacity | Buzzer wire current | Buzzer inrush current |
|---|---|---|---|---|---|
| 24V DC<br>AC100V/AC220V | 450mA | 4.5A | 50mA or more | Current 30mA | Inrush current 0.3A |

Nominal Cross-sectional Area : Wire Type : Wire Length
24V DC power supply wire 0.5mm² : UL1430 : 300mm
100V AC 0.75mm² : VCT : 280mm
220V AC power wire 0.75mm² : VCTF : 280mm
Signal wire 0.3mm² : UL1430 : 300mm

# Audible Alarms and MP3 Voice Annunciators

| Page number | Page 139 | | | | Page 140 | Page 141 | Page 143 | |
|---|---|---|---|---|---|---|---|---|
| Model Name | Audible Alarm | | | | Slim MP3 Voice Annunciator | | Audible Alarm | |
| Model | **BM** | | | | **BSV-L** | **BSV** | **BD-A** | |
| Product image | | | | | | | | |
| Rated Voltage | 24V AC/DC | 100V AC | 120V AC | 220V AC | 12-24V DC | 12-24V DC | 12-24V DC | 100/220V AC |
| Size (mm) | | ϕ30 | | | □75 | □75 | □80 | |
| IP | | 34 (D type) | | | 54 | 54 | 54 | |
| Sound pressure dB (at 1m) | | 90 (H type) | (H type) | | 87 | 87 | 90 | |
| Case | | ABS | | | ABS | ABS | ABS | |
| Terminal Block | | ○ | | | | | ○ | |
| Number of tones | | 2 | | | 15 | 15 | 32 | |
| Recording method | | | | | MP3 | MP3 | | |
| Maximum Playback Time | | | | | 520 s | 63 s | | |
| Message editing | | | | | ○ | ○ | | |
| Maximum number of messages | | | | | | | | |
| Number of channels (bit input) | | | | | 4 | 4 | ○ | |
| Number of channels (binary input) | | | | | 15 | 15 | | |
| Test mode | | | | | | | | |
| Sound Reduction | | | | | ○ | ○ | | |
| Open collector | | | | | Either NPN or PNP | Either NPN or PNP | NPN | |
| CE Marking | ○ | | | | ○ | ○ | ○ | |
| RoHS | | | | | ○ | ○ | ○ | |
| UL standards | | | | | ○ | ○ | ○ | |
| Switch box compatible | | | | | | | | |
| Built-in amp output | | | | | | | | |

| Page number | Page 151 | | | | |
|---|---|---|---|---|---|
| Model Name | Audible Alarm Horn | | | MP3 Voice Annunciator Horn | |
| Model | **EHS** | | | **EHV** | |
| Product image | | | | | |
| Rated Voltage | 12-24V DC | 12-48V DC | 100-240V AC | 12-24V DC | 12-48V DC | 100-240V AC |
| Size (mm) | | | | | | |
| IP | | 65 | | | 65 | |
| Sound pressure dB (at 1m) | | 110 | | | 110 | |
| Case | | PC | | | PC | |
| Terminal Block | | Terminal block or cable | | | Terminal block or cable | |
| Number of tones | | 32 | | | 63 | |
| Recording method | | | | | MP3 | |
| Maximum Playback Time | | | | | 220 s | |
| Message editing | | | | | ○ | |
| Maximum number of messages | | | | | | |
| Number of channels (bit input) | | 8 | | | 8 | |
| Number of channels (binary input) | | 32 | | | 63 | |
| Test mode | | | | | | |
| Sound Reduction | | ○ | | | ○ | |
| Open collector | NPN/PNP | NPN | | NPN/PNP | NPN | |
| CE Marking | ○ | ○ | | ○ | ○ | |
| RoHS | ○ | | | ○ | | |
| UL standards | ○ | | ○ | ○ | | ○ |
| Switch box compatible | | | | | | |
| Built-in amp output | | | | | | |

Simple message registration with various tools

https://www.patlite.com/oto/index0910.html

SD card slot

Messages can be changed using an SD card.

| Page number | Page 145 | | Page 147 | | | Page 149 | | |
|---|---|---|---|---|---|---|---|---|
| Model Name | MP3 Voice Annunciator | | Audible Alarm | | | MP3 Voice Annunciator | | |
| Model | **BDV** | | **BK** | | | **BKV** | | |
| Product image | | | | | | | | |
| Rated Voltage | 12-24V DC | 100/220V AC | 12-24V DC | 100V AC | 220V AC | 12-24V DC | 100V AC | 220V AC |
| Size (mm) | □80 | | | □120 | | | □120 | |
| IP | 54 | | | 54 | | | 54 | |
| Sound pressure dB (at 1m) | 87 | | | 95 | | | 95 | |
| Case | ABS | | | ABS | | | ABS | |
| Terminal Block | ○ | | | ○ | | | ○ | |
| Number of tones | | | | 32 | | | | |
| Recording method | MP3 | | | | | | MP3 | |
| Maximum Playback Time | 63 s | | | | | | 63 s | |
| Message editing | ○ | | | | | | ○ | |
| Maximum number of messages | | | | | | | | |
| Number of channels (bit input) | 4 | | | 8 | | | 5 | |
| Number of channels (binary input) | 15 | | | 32 | | | 31 | |
| Test mode | ○ | | | ○ | | | ○ | |
| Sound Reduction | | | | | | | | |
| Open collector | NPN | | | NPN | | | NPN | |
| CE Marking | ○ | | ○ | | | ○ | | |
| RoHS | ○ | | | ○ | | | ○ | |
| UL standards | | | | | | | | |
| Switch box compatible | | | | | | | | |
| Built-in amp output | | | | | | | | |

| Page number | Page 153 |
|---|---|
| Model Name | MP3 Player Circuit Board |
| Model | **FV-127JP** |
| Product image | |
| Rated Voltage | 24V DC |
| Size (mm) | 100×144 |
| IP | |
| Sound pressure dB (at 1m) | |
| Case | |
| Terminal Block | ○ |
| Number of tones | |
| Recording method | MP3 |
| Maximum Playback Time | 240 minutes (when using SD card) |
| Message editing | ○ |
| Maximum number of messages | 127 |
| Number of channels (bit input) | 7 |
| Number of channels (binary input) | 127 |
| Test mode | |
| Sound Reduction | |
| Open collector | ○ |
| CE Marking | |
| RoHS | ○ |
| UL standards | |
| Switch box compatible | |
| Built-in amp output | 4W |

* For specifications, see the product page.

[Use of Copyrighted Material]

PATLITE Corporation has not applied for permission to use certain copyrighted music or songs recorded for Type-A, Type-C and Type-D melody charts outside of Japan. Therefore, please contact the local copyright association for permission before using the product in case this product is used outside of Japan. Melody chart Type-E is recommended for use outside of Japan as this playlist does not include copyrighted music or songs, and permission is not required.

# BM

BM type <standard type>
BM-H type <maximum volume type>
BM-D type <Splash resistant type>

D type only

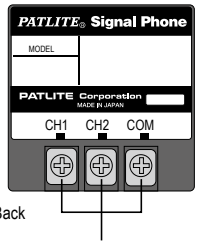


Sound pressure 90dB (BM-H type) | IP34 (BM-D type) | CE (only 24V) | 30φ

The BM Series features a compact design with a 30mm diameter speaker, comes loaded with 2 distinct tones with a 90dB sound output.

- Ultra-small, lightweight, audible with up to 90dB sound output
- 2 built-in sound tones to suitable for emergency alarms
- Up to 90dB sound output at 1m
- Designed for indoor mounting on a wall up to 7mm thick
- Can be operated by switching on/off power to the unit
- NPN/PNP types

| Channel | Channel 1 | Channel 2 |
|---|---|---|
| Tone | Intermittent Buzzer | Continuous Buzzer |

## Specification

| Model | | Rated Voltage | Operating Voltage Range | Power Consumption | Sound Pressure Level | External Contact Capacity | Operating Temperature Range | Contact Input Method | Playback Channel | Protection Rating | Mass |
|---|---|---|---|---|---|---|---|---|---|---|---|
| Standard type | **BM-202** | 24V AC/DC | 24V AC/V DC (±10%) | 0.4W | Maximum 80 dB (at 1m) | 100mA or more | -10℃ to +60℃ (humidity 85% or less) | Power supply input method | 2 | IP30 (only the front) | 0.1kg |
| | **BM-210** | 100V AC | 100V AC (±10%) | 2.5W | Maximum 85dB (at 1m) 990 - 1228Hz | | | | | | |
| | **BM-220** | 220V AC | 220V AC (±10%) | 3.5W | | | | | | | |
| Maximum volume type | **BM-202H** | 24V AC/DC | 24V AC/V DC (±10%) | 0.4W | Maximum 85 dB (at 1m) | | | | | | |
| | **BM-210H** | 100V AC | 100V AC (±10%) | 2.5W | Maximum 90dB (at 1m) 3803- 4715Hz | | | | | | |
| | **BM-220H** | 220V AC | 220V AC (±10%) | 3.5W | | | | | | | |
| Splash resistant type | **BM-202D** | 24V AC/DC | 24V AC/V DC (±10%) | 0.4W | Maximum 75 dB (at 1m) | | | | | IP34 (only the front) | |
| | **BM-210D** | 100V AC | 100V AC (±10%) | 2.5W | Maximum 80dB (at 1m) 990- 1228Hz | | | | | | |
| | **BM-220D** | 220V AC | 220V AC (±10%) | 3.5W | | | | | | | |

(Note) The indicated sound pressure level is at maximum volume and the actual level may be lower than the indicated sound pressure level due to tone and voltage fluctuations.
*When using multiple units, there may be variation in the playback sound even when started simultaneously with the tone.

## Model Code

**BM-220D**

Model
Rated Voltage

| | |
|---|---|
| 202 | 24V AC/DC |
| 210 | 100V AC |
| 220 | 220V AC |

Specification

| | |
|---|---|
| Blank | Standard type |
| H | Maximum volume type |
| D | Splash resistant type |

## Dimensions (mm)

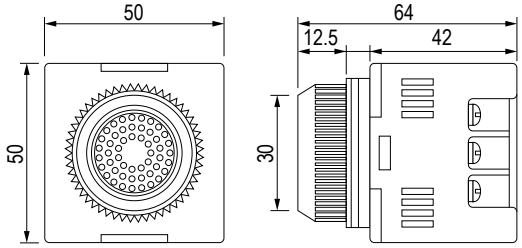


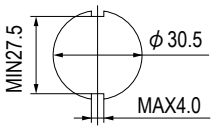


Board thickness = t; 7mm or less
Open with a φ30.5mm hole if the tab is not necessary.

## Wiring Diagram

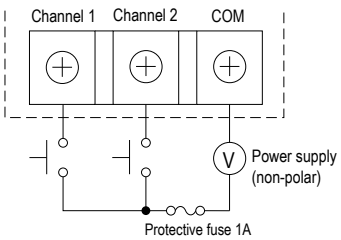


■Tone order of priority
Channel 1 > Channel 2
*If multiple signals are input simultaneously, it will prioritize Channel 1.

# BSV-L

-W (off-white) -D (off-dark gray) -S (Silver)

Simple message registration with various tools

The BSV-L Series features programmable voice signaling, an ultra-thin design and up to 520 seconds playback time with a 87dB sound output.

- Ultra-thin 19.9mm profile
- Maximum total playback time of 520 seconds
- Manual volume control located on back of unit and can also be adjusted by input signal
- IP54 rating for dust and water resistance
- NPN/PNP compatible

Sound pressure 87dB | IP54 | RoHS | UL | CE | 75 | FCC

## Synthetic sound

Full scale

☐Panel mounting

☐Wall mounting

Standard equipped with an SD card slot. Able to rewrite mp3 data on an SD card.
In addition to rewriting data using existing dedicated application software, this system is able to rewrite data just by changing the file name of mp3 data without having to use dedicated software.

### Compatible with multilingual voice guidance

☐Scenario: Commercial facility, public facility, transportation facility, tourist site
☐Application: facility guidance, event guidance, evacuation order, exhibit explanation

### Many different messages in a single unit

☐Scenario: Public washroom, elevator, escalator
☐Application: guidance on usage of facilities

#### 4 times the playback time for playback in 4 languages

With service enhancements based on multilingual support at commercial facilities, transportation facilities, and tourist sites on the rise, providing the voice guidance in the 4 languages of Japanese, English, Chinese, and Korean will require about 4 times the one language playback time. The BSV-L type enables a maximum 520 seconds playback, so easily ensures capacity for multilingual messages.

#### Support facility use with voice guidance

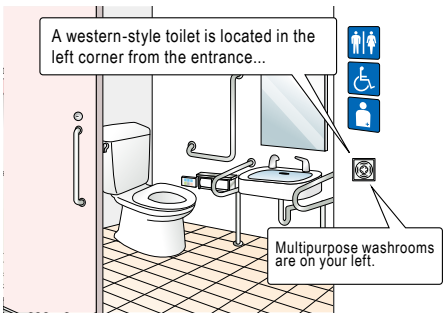


Support elderly and disabled users by providing voice guidance to enable them to use the facilities with ease. For example, at the entrance to public washrooms you can use the speaker to provide location and information of the multipurpose washrooms.

## Specification

| Model | Corresponding Transistor | Rated Voltage | Operating Voltage Range | Maximum Power Consumption | Sound Pressure Level | Operating Temperature Range | Maximum Seconds of Playback | Playback Channel | Protection Rating | Mass | Color of Body Front Cover | Registered Data |
|---|---|---|---|---|---|---|---|---|---|---|---|---|
| **BSV-24NLM** | NPN transistor | 12-24V DC | 10.8 - 26.4V DC | 3.5W | Maximum 87dB (at 1m) 1kHz sine wave playback | -10°C - +50°C (humidity 85% or less) | 520 s | 4 (bit input) 15 (binary input) *3 (bit input) and 7 (binary input) when used with sound reduction feature. | IP54 Only forward panel-mounted front | 100g ±10% | Off-white (-W) Off-dark gray (-D) Silver (-S) | Voice |
| **BSV-24NL** | | | | | | | | | | | | Alarm |
| **BSV-24PLM** | PNP transistor | | | | | | | | | | | Voice |
| **BSV-24PL** | | | | | | | | | | | | Alarm |

Audio files: MPEG1-Audio Layer Ⅲ (mp3) standard bitrate: 64kbit/s, Fs=44.1kHz
(Note) The indicated sound pressure level is the maximum volume (synthetic sound type: sine wave (1KHz)) and the actual level may be lower than the indicated sound pressure level due to message content, tone, and voltage fluctuations.
*When using multiple units, there may be variations in the playback sound even when started simultaneously with the tone. This product is not for mounting on a vehicle.

# BSV

The BSV Series features programmable voice signaling, an ultra-thin design and 15 built-in alarm sounds with a 87dB sound output.

- Ultra-thin 19.9mm profile
- 15 built-in standard alarm sound options
- Up to 87dB sound output at 1m
- Manual volume control located on back of unit and can also be adjusted by input signal
- IP54 rating for dust and water resistance
- NPN/PNP compatible

Sound pressure 87dB | IP54 | RoHS | UL | CE | 75 | FCC

## Synthetic sound

Full scale

☐Panel mounting

☐Wall mounting

Standard equipped with an SD card slot. Able to rewrite mp3 data on an SD card.
In addition to rewriting data using existing dedicated application software, this system is able to rewrite data just by changing the file name of mp3 data without having to use dedicated software.

☐Plays maximum 15 messages (BSV-M type)

☐15 built-in standard alarm sounds (BSV type)

Contains 15 standard alarm sounds.

| | | | | | | | | | |
|---|---|---|---|---|---|---|---|---|---|
| No.1 | Chime | No.2 | Beep | No.3 | Stutter | No.4 | Bell | No.5 | Yelp |
| No.6 | Rapid Hi-Lo | No.7 | Melody Chime | No.8 | Synthesized Piano | No.9 | Synthesized Bell | No.10 | Stutter & Bell |
| No.11 | Synthesized Melody | No.12 | Call Sign | No.13 | Inverted Reveille x3 | No.14 | Galactic Motor | No.15 | Two Tone |

*All standard alarm sounds and mp3 data in the main unit memory is deleted when rewriting a message.

☐Multicolored operation mode

Variety of 8 operation modes.

| Operating Mode | | | | | | | |
|---|---|---|---|---|---|---|---|
| A | Bit input and normal playback | C | Bit input and hold playback | E | Binary input and normal playback | G | Binary input and hold playback |
| B | Playback prioritizing bit input and subsequent input | D | Bit input and memory playback | F | Playback prioritizing binary input and subsequent input | H | Binary input and memory playback |

*Changing operation modes requires an SD card (SDV-2GP sold separately). Operation is not guaranteed when using other types of SD cards.
*While initial registered alarm data includes 15 sounds, operation mode must be changed to binary input when using all of them.

☐Data rewriting method without the dedicated application.

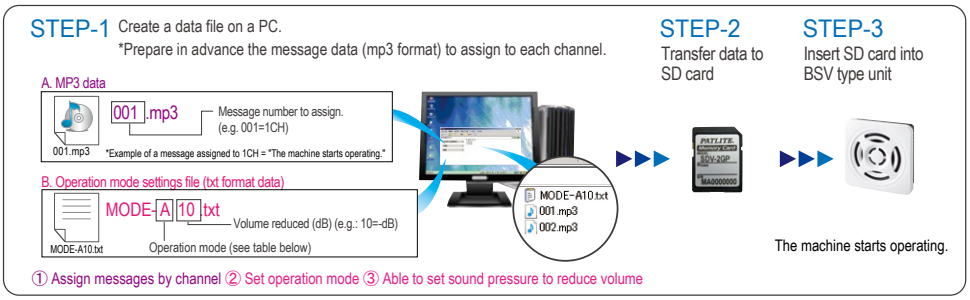


① Assign messages by channel ② Set operation mode ③ Able to set sound pressure to reduce volume

Using the special application software enables additional features, such as produce a combination of messages and make individual volume adjustments.

## Specification

| Model | Corresponding Transistor | Rated Voltage | Operating Voltage Range | Maximum Power Consumption | Sound Pressure Level | Operating Temperature Range | Maximum Seconds of Playback | Playback Channel | Protection Rating | Mass | Color of Body Front Cover | Registered Data |
|---|---|---|---|---|---|---|---|---|---|---|---|---|
| **BSV-24NM** | NPN transistor | 12-24V DC | 10.8 - 26.4V DC | 3.5W | Maximum 87dB (at 1m) 1kHz sine wave playback | -10℃ - +50℃ (humidity 85 % or less) | 63 s | 4 (bit input) 15 (binary input) *3 (bit input) and 7 (binary input) when used with sound reduction feature. | IP54 Only forward panel-mounted front | 100g ±10% | Off-white (-W) Off-dark gray (-D) Silver (-S) | Voice |
| **BSV-24N-W/D** | | | | | | | | | | | | Alarm |
| **BSV-24PM** | PNP transistor | | | | | | | | | | | Voice |
| **BSV-24P-W** | | | | | | | | | | | | Alarm |

Voice files: MPEG1-audio Layer Ⅲ (mp3), standard bit rate: 64kbit/s, Fs=44.1kHz
(Note) The indicated sound pressure level is the maximum volume (synth esized sound type: sine wave (1KHz)) and the actual level may be lower than the indicated sound pressure level due to message content, tone, and voltage fluctuations.
*When using multiple units, there may be variations in the play back sound even when started simultaneously with the tone. This product is not intended for the use of mounting on a vehicle.

## Model Code

# BSV-24NLM-W

Model

Corresponding Transistor

| | |
|---|---|
| N | NPN |
| P | PNP |

Recording time

| | |
|---|---|
| L | 520 s |
| Blank | 63 s |

Message recording

| | |
|---|---|
| Blank | None (15 built-in alarm sounds) |
| M | Specified messages registered on delivery |

Color of Body Front Cover

| | |
|---|---|
| W | Off-white |
| D | Off-darkgray |
| S | Silver |

## Optional Parts

For details, see pages 182 to 187.

| Optional Parts | Model |
|---|---|
| SD card (2GB) | SDV-2GP |

## Dimensions (mm)

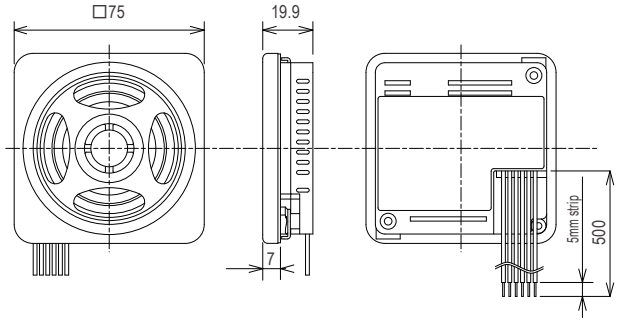


Mounting Dimensions

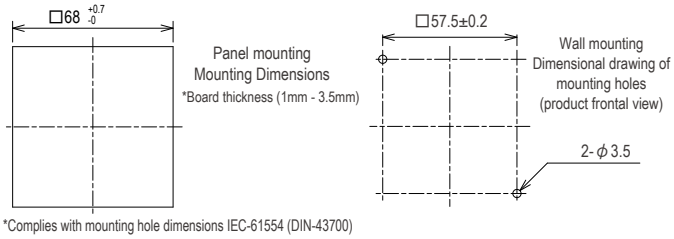


*Complies with mounting hole dimensions IEC-61554 (DIN-43700)

## Wiring Diagram

BSV-24NL (M) / BSV-24N (M)

NPN type

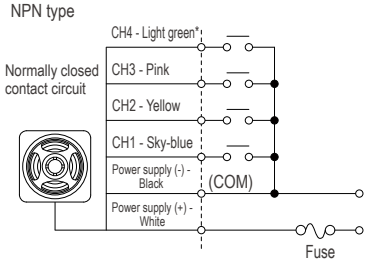


NPN transistor circuit

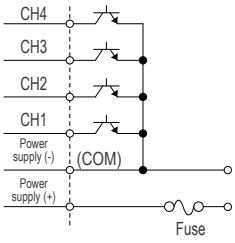


BSV-24PL (M) / BSV-24P (M)

PNP type

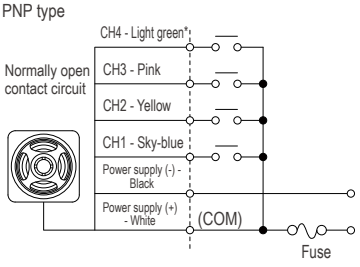


PNP transistor circuit

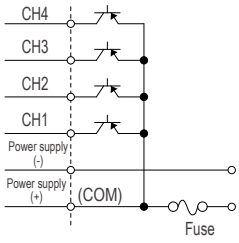


*Signal wire CH4 (Light green) is used for the sound reduction feature. When the feature is used, the number of playback messages is 3 channels (for bit input) and 7 channels (for binary input).

## Speaker

□BSV shaped speakers are also available in the lineup.

We have also added BSV shaped speakers to the lineup, which you can use for purposes that do not require synthesized sounds.
With an IP54 (forward-mounted front only, when panel mounted) the compact speakers do not take much space to install.

SPB-2E type (2W 8Ω)
-W (Off-white)

# BD-A

-J (Light gray)

-K (Dark gray)

The BD Series features a embedded mounting design and comes pre-loaded with 32 built-in sounds with a 90dB sound output.

- Front switch and volume control access
- 32 built-in standard alarm sound options
- Up to 90dB sound output at 1m
- IP54 rating for dust and water resistance
- NPN compatible

Sound pressure 90dB | IP54 | RoHS | UL (only 24V) | CE (only 24V) | 80 | FCC

## Table of tones

**32 Built-in Tones.** Every unit has 32 tones built-in.
Four built-in variations include BD-AA, BD-AC, BD-AD and BD-AE.

### Type A

| Beep | Stutter | Bell | Yelp |
|---|---|---|---|
| Rapid Hi-Lo | Melody Chime | Synthesized Piano | Synthesized Bell |
| Stutter & Bell | Synthesized Melody | Chime | Call Sign |
| Fur Elise | A Maiden's Prayer | Minuet in Gmjr | Annie Laurie |
| London bridge is falling down | Holdiridia | Mary had a little Lamb | Camptown Races |
| Cuckoo Song | Village Blacksmith | On the Avignon Bridge | Daydream Believer |
| Amaryllis | Mozart Symphony No.40 | Quiet Lakeside | Mountain Musician |
| Spanish Romance | Katyusha | Grandfather's Clock | Ave Maria |

### Type C

| Beep | Stutter | Bell | Yelp |
|---|---|---|---|
| Rapid Hi-Lo | Melody Chime | Synthesized Piano | Synthesized Bell |
| Stutter & Bell | Synthesized Melody | Chime | Call Sign |
| Can't take my eyes off of You | Top of the World | The Entertainer | Amazing Grace |
| Maiden with the flaxen hair | Aux Champs-Elysees | Canon | La-la Sunshine |
| Space Battleship Yamato | Oshiete | Makenai de | Theme Song |
| I Don't Want to Miss a Thing | Yozora no Mukou | Ai wa Katsu | Truth |
| Guts Daze!! | Odoru Ponpokorin | Ima sugu Kiss Me | Haru yo, Koi |

### Type D

| Beep | Stutter | Bell | Yelp |
|---|---|---|---|
| Rapid Hi-Lo | Melody Chime | Synthesized Piano | Synthesized Bell |
| Chime | Call Sign | Runner | Mamotte Agetai |
| While listening to Olivia | September | Douyobi no Koibito | Aki no Kihai |
| Surf Tengoku, Ski Tengoku | Iro, White Blend | Happy Birthday | Hi Ho |
| I've been working on the Railroad | The Bear Song | Toys Go Cha-Cha-Cha | Konnako Irukana |
| Shubert's Lullaby | Rudolph the Red-nosed Reindeer | She Wore a Yellow Ribbon | My Darling Clementine |
| Yellow Rose of Texas | Yankee Doodle | When the Saints Go Marching In | Londonderry Aire |

### Type E

| Beep | Stutter | Bell | Yelp |
|---|---|---|---|
| Rapid Hi-Lo | Melody Chime | Synthesized Piano | Synthesized Bell |
| Stutter & Bell | Synthesized Melody | Chime | Call Sign |
| Bee-boh sound | Galloping Hi-Lo | Alien Chatter | Falling Crystals |
| Inverted Reveille x3 | Galactic Motor | Ringing Phone | Two Tone |
| Alarm Clock | Ringing Hi-Lo | Fur Elise | Minuet in Gmjr |
| Annie Laurie | London bridge is falling down | Mary had a little Lamb | Camptown Races |
| Amaryllis | Mozart Symphony No.40 | Ave Maria | Grandfather's Clock |

**Use of Copyrighted Material**

PATLITE Corporation has not applied for permission to use certain copyrighted music or songs recorded for Type-A, Type-C and Type-D melody charts outside of Japan. Therefore, please contact the local copyright association for permission before using the product in case this product is used outside of Japan. Melody chart Type-E is recommended for use outside of Japan as this playlist does not include copyrighted music or songs, and permission is not required.

- 4-sound playback (see instruction manual for 4 sound grouping)
- Alarm tones are denoted in characters for convenience' sake. Please inquire about actual tones or check our website for more details.

## Specification

| Model | Rated Voltage | Operating Voltage Range | Maximum Power Consumption | Sound Pressure Level | Operating Temperature Range | Contact Input Method | Playback Channel | Protection Rating | Mass |
|---|---|---|---|---|---|---|---|---|---|
| **BD-24AA-J/-K<br>BD-24AC-J/-K<br>BD-24AD-J/-K<br>BD-24AE-J/-K** | 12-24V DC | 10.8 - 26.4V DC | 4W | Maximum 90 dB (at 1m)* | -20℃ to +55℃ (humidity 85% or less) | 1 bit input | 4 | IP54 (Mount on forward-facing panel) Front only | 160g |
| **BD-100AA-J/-K<br>BD-100AC-J/-K<br>BD-100AD-K<br>BD-100AE-J** | 100/220V AC | 100V AC±10%<br>220V AC±10% | 5W | | | | | | 180g |

*The sound pressure level changes based on tone, use environment, and working voltage.

## Model Code

# BD-24AA-J

Model

Rated Voltage

| | |
|---|---|
| 24 | 12 - 24V DC |
| 100 | 100/220V AC |

Color of Main Unit Front

| | |
|---|---|
| J | Light gray |
| K | Dark gray |

Tone type

| | |
|---|---|
| A | Type A |
| C | Type C |
| D | Type D |
| E | Type E |

## Optional Parts

For details, see pages 182 to 187.

| Optional Parts | Model |
|---|---|
| SD card (2GB) | SDV-2GP |

## Dimensions (mm)

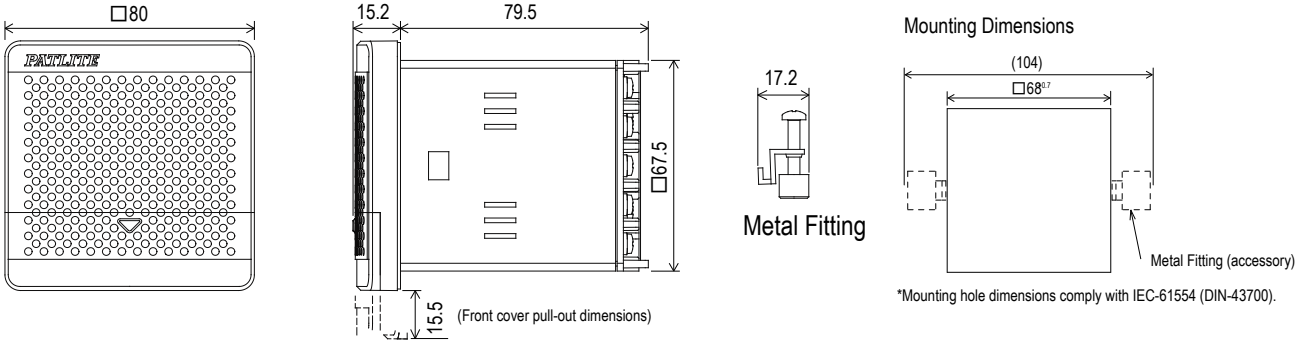


## Wiring Diagram

### Example: BD-24A NPN transistor connection diagram

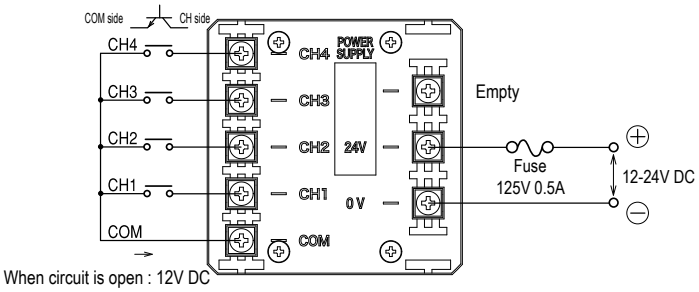


When circuit is open : 12V DC
When circuit is close : 7 mA

### Example: BD-100A NPN transistor connection diagram

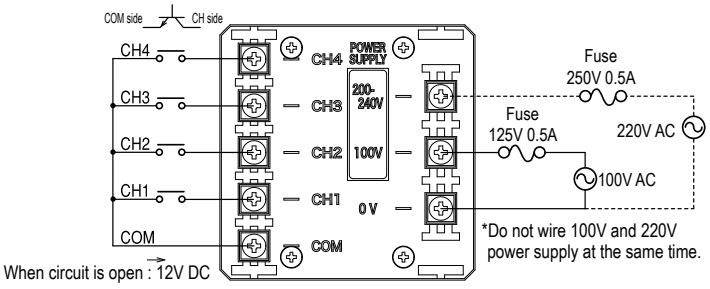


When circuit is open : 12V DC
When circuit is close : 7 mA

Do not apply voltage to signal terminals.
This may damage the product.

Remove terminal cover before wiring the product. Also, replace terminal cover after wiring.

# BDV

-K (Dark gray)

-J (Light gray)

The BDV Series features programmable voice signaling, an embedded mounting design and a sound output of 90dB.

- Front switch and volume control access
- Up to 90dB sound output at 1m
- IP54 rating for dust and water resistance
- NPN compatible

Sound pressure 87dB | IP54 | RoHS | CE (only 24V) | 80

## Sound Playback Mode

Select various playback modes based on their application.

| | | |
|---|---|---|
| A | Bit input mode | Plays back up to 4 messages using Channels 1 to 4. |
| B | Binary input mode | Plays back up to 15 messages using Channels 1 to 4. |
| C | Bit input and sound reduction mode | Plays back up to 3 messages using Channels 1 to 3. When Channel 4 receives an input, the volume is reduced by about -10dB. |
| D | Binary input and sound reduction mode | Plays back up to 7 messages using Channels 1 to 3. When Channel 4 receives an input, the volume is reduced by about -10dB. |
| E | Playback mode prioritizing bit input and subsequent input | Plays back up to 7 messages using Channels 1 to 3. If a message input occurs during playback of another message, the message will stop and allow the input message to play back. |
| F | Playback mode prioritizing binary input and subsequent input | Plays back up to 15 messages using Channels 1 to 4. If a message input occurs during playback of another message, the message will stop and allow the input message to play back. |
| G | Bit input and hold playback mode | Plays back up to 4 messages using Channels 1 to 4. As long as the input is held on, the message is played back, once the input is removed, the message playback stops. |
| H | Binary input and hold playback mode | Plays back up to 15 messages using Channels 1 to 4. As long as the input is held on, the message is played back, once the input is removed, the message playback stops. |
| I ~ P | Test mode | Plays back Message No. 1 |

## Specification

| Model | Rated Voltage | Operating Voltage Range | Maximum Power Consumption | Sound Pressure Level | Audio File | Operating Temperature Range | Maximum Seconds of Playback | Playback Channel | Protection Rating | Mass |
|---|---|---|---|---|---|---|---|---|---|---|
| **BDV-15JF** | 12-24V DC | 10.8 - 26.4V DC | 4W | Maximum 87 dB (at 1m) | MPEG1-Audio Layer Ⅲ (mp3) Standard bitrate : 64kbit/s, Fs=44.1kHz | -10℃ to +50℃ (humidity 85% or less) | 63 s | 4 (bit input) 15 (binary input) | IP54 (Mount on forward-facing panel) Front only | 0.22kg |
| **BDV-15KF** | 100/220V AC | 100V AC±10% 220V AC±10% | 5W | | | | | | | 0.34kg |

(Note) The indicated sound pressure level is the maximum volume (synthesized sound type: sine wave (1KHz)) and the actual level may be lower than the indicated sound pressure level due to message content, tone, and voltage fluctuations.
*When using multiple units, there may be variations in the playback sound even when started simultaneously with the tone. This product is not for mounting on a vehicle.

## Model Code

**BDV-15JF-J**

Model

Rated Voltage

| | |
|---|---|
| J | 12 - 24V DC |
| K | 100 V/220V AC |

Color of Main Unit Front

| | |
|---|---|
| J | Light gray |
| K | Dark gray |

## Optional Parts

For details, see pages 182 to 187.

| Optional Parts | Model |
|---|---|
| SD card (2GB) | SDV-2GP |

## Dimensions (mm)

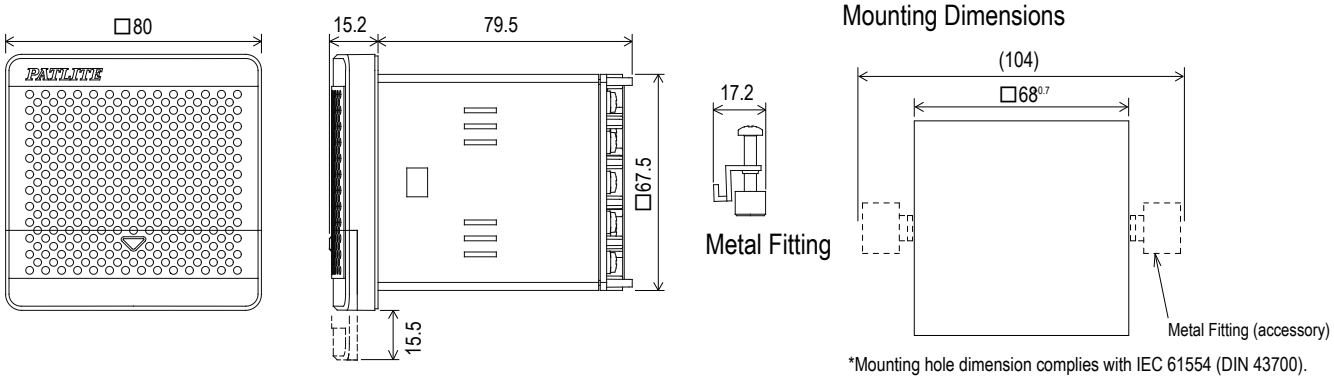


*Mounting hole dimension complies with IEC 61554 (DIN 43700).

## Wiring Diagram

### BDV-15JF

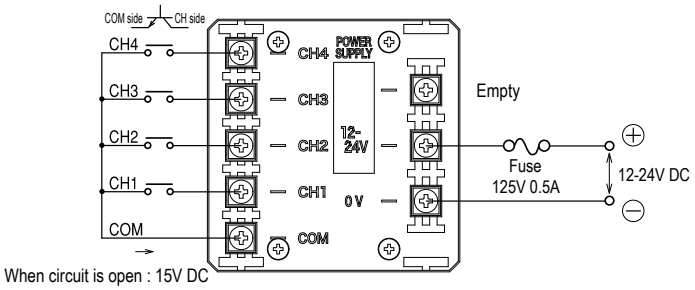


When circuit is open : 15V DC
When circuit is close : 7 mA

### BDV-15KF

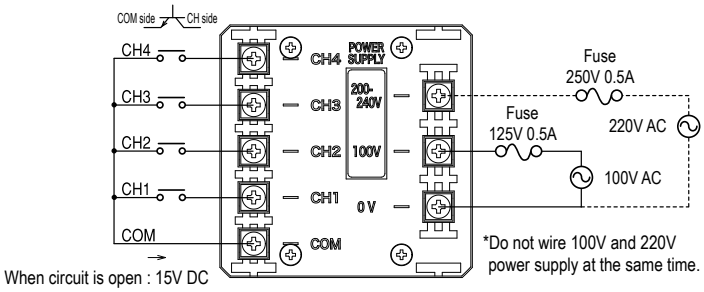


When circuit is open : 15V DC
When circuit is close : 7 mA

*Do not wire 100V and 220V power supply at the same time.

Do not apply voltage to signal terminals. This may damage the product.

Remove terminal cover before wiring the product. Also, replace terminal cover after wiring.

Table 1: Signal circuit

| Normally closed contact circuit | Open collector circuit (NPN type) |
|---|---|
| 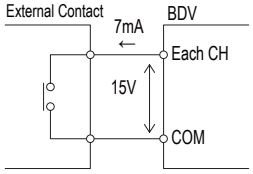 | 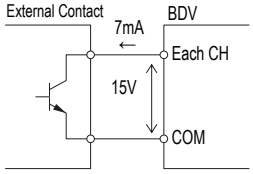 |



Table 2: Signal contact capacity

| | |
|---|---|
| Current Capacity | 10mA or more |
| Withstand Voltage | 20V DC or more |
| Leakage Current | 0.1mA or less |
| ON voltage (Vsat) | 1V or less |

# BK

-J (Light gray)

-K (Dark gray)

The BK Series features an embedded mounting design, a sound output of 95dB, and comes pre-loaded with 32 sound tones.

- Front switch and volume control access
- Pre-loaded with 32 tone and alarm sound options
- Up to 95dB sound output at 1m
- IP54 rating for dust and water resistance
- NPN compatible

Sound pressure 95dB | IP54 | RoHS | CE | 120

(only 24V)

## Table of tones

**32 Built-in Tones.** Every unit has 32 tones built-in.

Four built-in variations include BD-AA, BD-AC, BD-AD and BD-AE.

### Type A

| Beep | Stutter | Bell | Yelp |
|---|---|---|---|
| Rapid Hi-Lo | Melody Chime | Synthesized Piano | Synthesized Bell |
| Stutter & Bell | Synthesized Melody | Chime | Call Sign |
| Fur Elise | A Maiden's Prayer | Minuet in Gmjr | Annie Laurie |
| London bridge is falling down | Holdiridia | Mary had a little Lamb | Camptown Races |
| Cuckoo Song | Village Blacksmith | On the Avignon Bridge | Daydream Believer |
| Amaryllis | Mozart Symphony No.40 | Quiet Lakeside | Mountain Musician |
| Spanish Romance | Katyusha | Grandfather's Clock | Ave Maria |

### Type C

| Beep | Stutter | Bell | Yelp |
|---|---|---|---|
| Rapid Hi-Lo | Melody Chime | Synthesized Piano | Synthesized Bell |
| Stutter & Bell | Synthesized Melody | Chime | Call Sign |
| Can't take my eyes off of You | Top of the World | The Entertainer | Amazing Grace |
| Maiden with the flaxen hair | Aux Champs-Elysees | Canon | La-la Sunshine |
| Space Battleship Yamato | Oshiete | Makenai de | Theme Song |
| I Don't Want to Miss a Thing | Yozora no Mukou | Ai wa Katsu | Truth |
| Guts Daze!! | Odoru Ponpokorin | Ima sugu Kiss Me | Haru yo, Koi |

### Type D

| Beep | Stutter | Bell | Yelp |
|---|---|---|---|
| Rapid Hi-Lo | Melody Chime | Synthesized Piano | Synthesized Bell |
| Chime | Call Sign | Runner | Mamotte Agetai |
| While listening to Olivia | September | Douyobi no Koibito | Aki no Kihai |
| Surf Tengoku, Ski Tengoku | Iro, White Blend | Happy Birthday | Hi Ho |
| I've been working on the Railroad | The Bear Song | Toys Go Cha-Cha-Cha | Konnako Irukana |
| Shubert's Lullaby | Rudolph the Red-nosed Reindeer | She Wore a Yellow Ribbon | My Darling Clementine |
| Yellow Rose of Texas | Yankee Doodle | When the Saints Go Marching In | Londonderry Aire |

### Type E

| Beep | Stutter | Bell | Yelp |
|---|---|---|---|
| Rapid Hi-Lo | Melody Chime | Synthesized Piano | Synthesized Bell |
| Stutter & Bell | Synthesized Melody | Chime | Call Sign |
| Bee-boh sound | Galloping Hi-Lo | Alien Chatter | Falling Crystals |
| Inverted Reveille x3 | Galactic Motor | Ringing Phone | Two Tone |
| Alarm Clock | Ringing Hi-Lo | Fur Elise | Minuet in Gmjr |
| Annie Laurie | London bridge is falling down | Mary had a little Lamb | Camptown Races |
| Amaryllis | Mozart Symphony No.40 | Ave Maria | Grandfather's Clock |

Use of Copyrighted Material

PATLITE Corporation has not applied for permission to use certain copyrighted music or songs recorded for Type-A, Type-C and Type-D melody charts outside of Japan. Therefore, please contact the local copyright association for permission before using the product in case this product is used outside of Japan.
Melody chart Type-E is recommended for use outside of Japan as this playlist does not include copyrighted music or songs, and permission is not required.

- Bit input → plays 8 sounds (see instruction manual for 8 sound grouping) Binary input → plays 32 sounds
- Alarm tones are denoted in characters for convenience' sake. Please inquire about actual tones or check our website for more details.

## Specification

Colors not listed in stock products, and any products other than stock products are made-to-order.

| Model | Rated Voltage | Operating Voltage Range | Maximum Power Consumption | Sound Pressure Level | Operating Temperature Range | Playback Channel | Protection Rating | Mass |
|---|---|---|---|---|---|---|---|---|
| BK-24A-J/-K | 12-24V DC | 10.8 - 26.4V DC | 12W | Maximum 95 dB (at 1m)* | -20℃ to +50℃ (humidity 85% or less) | Bit input: 8 Binary input: 32 | IP54 (Mount on forward-facing panel) Front only | 0.35kg |
| BK-24C-J | | | | | | | | |
| BK-24E-J | | | | | | | | |
| BK-100A-J | 100V AC | 100V AC±10% | 10W | | | | | 0.53kg |
| BK-220A-J | 220V AC | 220V AC±10% | 11W | | | | | 0.53kg |

*The sound pressure level changes based on tone, use environment, and working voltage.

## Model Code

# BK-24A-J

Model

Rated Voltage

| | |
|---|---|
| 24 | 12-24V DC |
| 100 | 100V AC |
| 220 | 220V AC |

Tone type

| | |
|---|---|
| A | Type A |
| C | Type C |
| D | Type D |
| E | Type E |

Colors

| | |
|---|---|
| J | Light gray |
| K | Dark gray |

The following custom specifications are available.

● PNP open collector specifications

## Optional Parts

For details, see pages 182 to 187.

| Optional Parts | Model |
|---|---|
| Mounting bracket | BK-001<br>(2 fixed seals attached) |
| Mounting bracket | BK-002-J |
| Mounting bracket | BK-002-K |
| SD card (2GB) | SDV-2GP |

*The BK-001 type can use ☐130 embedded mounting holes.

## Dimensions (mm)

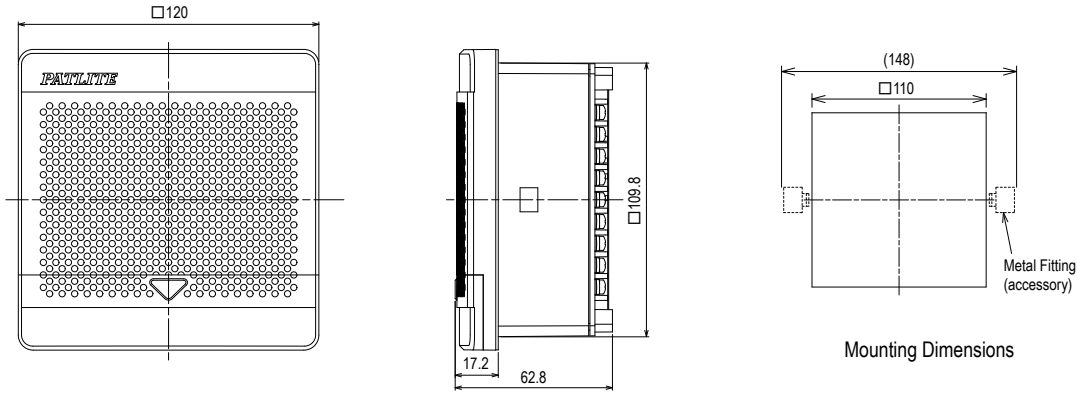


Mounting Dimensions

## Wiring Diagram

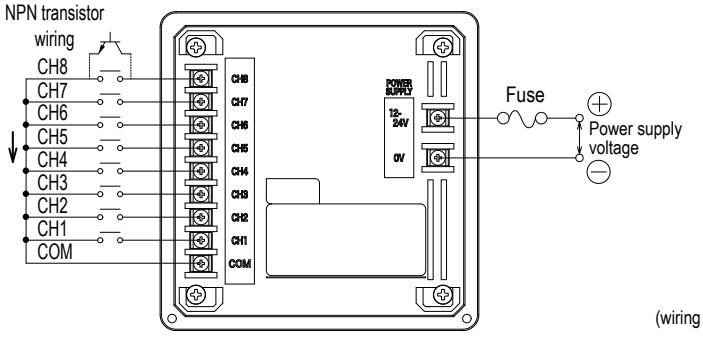


■BK-24 wiring diagram

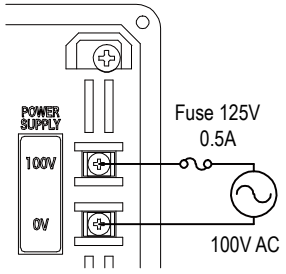


■BK-100 wiring diagram
(wiring for signal contacts is the same as BK-24)

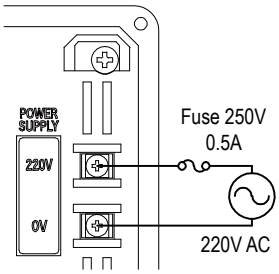


■BK-220 wiring diagram
(wiring for signal contacts is the same as BK-24)

Please wire the power supply voltage indicated to the left of the power supply terminal.

Do not apply voltage to signal terminals.
This may damage the product.

| Fuse | |
|---|---|
| BK-24 | 125V 1A |
| BK-100 | 125V 0.5A |
| BK-220 | 250V 0.5A |

| Channel contact capacity | |
|---|---|
| Current Capacity | 10mA or more |
| Withstand Voltage | 20V DC or more |
| Leakage Current | 0.1mA or less |
| ON voltage (Vsat) | 1V or less |

# BKV

-J (Light gray)

-K (Dark gray)

The BKV Series features programmable voice signaling, an embedded mounting design, and a sound output of 95dB.

- Front switch and volume control access
- Comes pre-loaded with select voice messages but can be easily overwritten
- Up to 95dB sound output at 1m
- IP54 rating for dust and water resistance
- NPN compatible

Sound pressure 95dB | IP54 | RoHS | CE (only 24V) | 120

## Sound Playback Mode

Select various playback modes based on their application.

| | | |
|---|---|---|
| A | Bit input mode | Plays back up to 5 messages using Channels 1 to 5. |
| B | Binary input mode | Plays back up to 31 messages using Channels 1 to 5. |
| C | Bit input and sound reduction mode | Plays back up to 4 messages using Channels 1 to 4. When Channel 5 receives an input, the volume is reduced by about -15dB. |
| D | Binary input and sound reduction mode | Plays back up to 15 messages using Channels 1 to 4. When Channel 5 receives an input, the volume is reduced by about -15dB. |
| E | Playback mode prioritizing bit input and subsequent input | Plays back up to 5 messages using Channels 1 to 5. If a message input occurs during playback of another message, the message will stop and allow the input message to play back. |
| F | Playback mode prioritizing binary input and subsequent input | Plays back up to 31 messages using Channels 1 to 5. If a message input occurs during playback of another message, the message will stop and allow the input message to play back. |
| G | Bit input and hold playback mode | Plays back up to 5 messages using Channels 1 to 5. As long as the input is held on, the message is played back, once the input is removed, the message playback stops. |
| H | Binary input and hold playback mode | Plays back up to 31 messages using Channels 1 to 5. As long as the input is held on, the message is played back, once the input is removed, the message playback stops. |
| I ~ P | Test mode | Plays back Message No. 1 |

## Specification

| Model | Rated Voltage | Operating Voltage Range | Maximum Power Consumption | Sound Pressure Level | Audio File | Operating Temperature Range | Maximum Seconds of Playback | Playback Channel | Protection Rating | Mass |
|---|---|---|---|---|---|---|---|---|---|---|
| **BKV-31JF** | 12-24V DC | 10.8 - 26.4V DC | 9W | Maximum 95 dB (at 1m) | MPEG1-Audio Layer Ⅲ (MP3) Standard bitrate : 64kbit/s, Fs=44.1kHz | -10℃ to +50℃ (humidity 85% or less) | 63 s | 5 (bit input) 31 (binary input) | IP54 (Mount on forward-facing panel) Front only | 0.35kg |
| **BKV-31KF** | 100V AC | 100V AC±10% | 10W | | | | | | | 0.53kg |
| **BKV-31QF** | 220V AC | 220V AC±10% | 10W | | | | | | | 0.53kg |

(Note) The indicated sound pressure level is the maximum volume (synthesized sound type: sine wave (1KHz)) and the actual level may be lower than the indicated sound pressure level due to message content, tone, and voltage fluctuations.
*When using multiple units, there may be variation in the playback sound even when started simultaneously with the tone and voice. This product is not for mounting on a vehicle.

## Model Code

**BKV-31JF-J**

Model

Rated Voltage

| | |
|---|---|
| J | 12 - 24V DC |
| K | 100V AC |
| Q | 220V AC |

Colors

| | |
|---|---|
| J | Light gray |
| K | Dark gray |

## Optional Parts

For details, see pages 182 to 187.

| Optional Parts | Model |
|---|---|
| Mounting bracket | BK-001 (2 fixed seals attached) |
| Mounting bracket | BK-002-J |
| Mounting bracket | BK-002-K |
| SD card (2GB) | SDV-2GP |

*The BK-001 type can use ☐130 embedded mounting holes.

## Dimensions (mm)

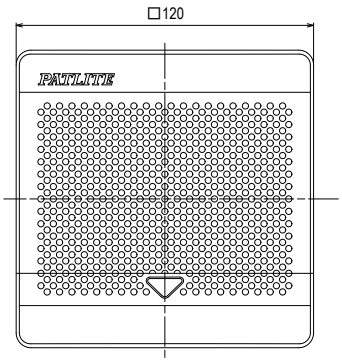


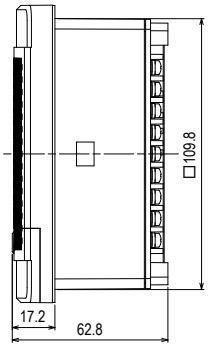


Mounting Dimensions

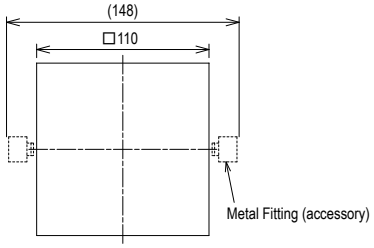


## Wiring Diagram

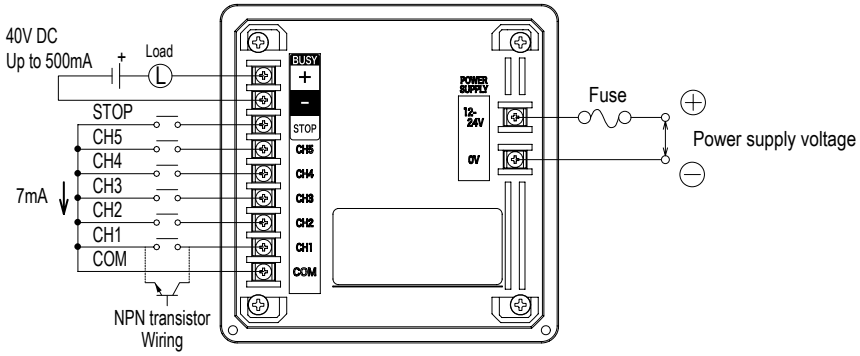


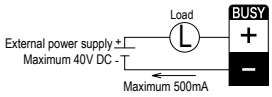


Table 1: Signal circuit

| Normally closed contact circuit | Open collector circuit (NPN type) |
|---|---|
| 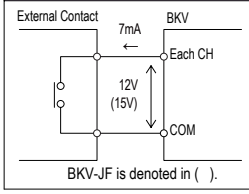 | 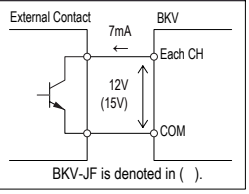 |
| BKV-JF is denoted in ( ). | BKV-JF is denoted in ( ). |



Table 2: Power supply inrush current and fuses

| Model | Inrush current | Fuse |
|---|---|---|
| BKV-JF | Maximum 10A/5ms | 125V 1A |
| BKV-KF | Maximum 1.5A/12ms | 125V 0.5A |
| BKV-QF | Maximum 1.2A/0.5ms | 250V 0.5A |

Table 3: Signal contact capacity

| | |
|---|---|
| Current Capacity | 10mA or more |
| Withstand Voltage | 20V DC or more |
| Leakage Current | 0.1mA or less |
| ON voltage (Vsat) | 1V or less |

Do not apply voltage to signal terminals.
Do not apply an overload, reverse polarities or an over-voltage to the Busy terminal. Product damage may occur.

# EHS/EHV

- M3 specifications have achieved anti-vibration 7G and passed vibration testing standards for automobile parts <JIS D 1601-1995, types 3 and B> by attaching anti-vibration rubber.
- 4 operation modes can be selected. (EHS type has Hold Playback only)

The EH Series features programmable voice signaling, high vibration resistance, and a high sound output of 110dB, designed to be heard above machine noise.

- Vibration resistant up to 4.5G, ideal for moving vehicles
- Comes pre-loaded with tone and alarm sounds
- Up to 110dB sound output at 1m
- IP65 rating for dust and water resistance
- Built-in sound reduction feature for quieter environments
- NPN/PNP compatible

Sound pressure 110dB | IP65 | RoHS (only M1) | UL (excluding M3) | CE (excluding M2) | FCC (excluding M3) | KC (excluding M3)

## Table of tones

### ■EHS Tone List

Type A

| Beep | Stutter | Bell | Yelp |
|---|---|---|---|
| Rapid Hi-Lo | Melody Chime | Synthesized Piano | Synthesized Bell |
| Stutter & Bell | Synthesized Melody | Chime | Call Sign |
| Fur Elise | A Maiden's Prayer | Minuet in Gmjr | Annie Laurie |
| London bridge is falling down | Holdiridia | Mary had a little Lamb | Camptown Races |
| Cuckoo Song | Village Blacksmith | On the Avignon Bridge | Daydream Believer |
| Amaryllis | Mozart Symphony No.40 | Quiet Lakeside | Mountain Musician |
| Spanish Romance | Katyusha | Grandfather's Clock | Ave Maria |

Type C

| Beep | Stutter | Bell | Yelp |
|---|---|---|---|
| Rapid Hi-Lo | Melody Chime | Synthesized Piano | Synthesized Bell |
| Stutter & Bell | Synthesized Melody | Chime | Call Sign |
| Can't take my eyes off of You | Top of the World | The Entertainer | Amazing Grace |
| Maiden with the flaxen hair | Aux Champs-Elysees | Canon | La-la Sunshine |
| Space Battleship Yamato | Oshiete | Makenai de | Theme Song |
| I Don't Want to Miss a Thing | Yozora no Mukou | Ai wa Katsu | Truth |
| Guts Daze!! | Odoru Ponpokorin | Ima sugu Kiss Me | Haru yo, Koi |

Type D

| Beep | Stutter | Bell | Yelp |
|---|---|---|---|
| Rapid Hi-Lo | Melody Chime | Synthesized Piano | Synthesized Bell |
| Chime | Call Sign | Runner | Mamotte Agetai |
| While listening to Olivia | September | Douyobi no Koibito | Aki no Kihai |
| Surf Tengoku, Ski Tengoku | Iro, White Blend | Happy Birthday | Hi Ho |
| I've been working on the Railroad | The Bear Song | Toys Go Cha-Cha-Cha | Konnako Irukana |
| Shubert's Lullaby | Rudolph the Red-nosed Reindeer | She Wore a Yellow Ribbon | My Darling Clementine |
| Yellow Rose of Texas | Yankee Doodle | When the Saints Go Marching In | Londonderry Aire |

Type E

| Beep | Stutter | Bell | Yelp |
|---|---|---|---|
| Rapid Hi-Lo | Melody Chime | Synthesized Piano | Synthesized Bell |
| Stutter & Bell | Synthesized Melody | Chime | Call Sign |
| Bee-boh sound | Galloping Hi-Lo | Alien Chatter | Falling Crystals |
| Inverted Reveille x3 | Galactic Motor | Ringing Phone | Two Tone |
| Alarm Clock | Ringing Hi-Lo | Fur Elise | Minuet in Gmjr |
| Annie Laurie | London bridge is falling down | Mary had a little Lamb | Camptown Races |
| Amaryllis | Mozart Symphony No.40 | Ave Maria | Grandfather's Clock |

### ■EHV Tone List

Type F

| Galactic Hovercraft | Game Intermission | Spring Melody | Jalopy Horn |
|---|---|---|---|
| ET Doorbell | RR-crossing | Train Whistle | Train Ride |
| Starting Notice Chime1 | Starting Notice Chime2 | Starting Notice Chime3 | Ending Notice Chime1 |
| Ending Notice Chime2 | RHYTHM AND POLICE | ZANKOKUNA TENSHINO TEEZE | MAJINGAA ZETTO |
| HATARAKU KURUMA | NINGENTTE IINA | ROBINSON | WORLD FOOTBALL ANTHEM |
| BANZAI SUKIDE YOKATTA | NAMONAKI UTA | SOUSEINO AKUERION | MAMBO NO 5 |
| The Parade of the Tin Soldiers | Turkey in the Straw | Aka tombo | Funiculi, Funicula |
| Furusato | Beautiful Dreamer | JOLLY HOLIDAY | |
| The above 31 tones & 32 EHS type A tones are built-in | | | |

Type G

| Galactic Hovercraft | Game Intermission | Spring Melody | Jalopy Horn |
|---|---|---|---|
| ET Doorbell | RR-crossing | Starting Notice Chime1 | Starting Notice Chime2 |
| Ending Notice Chime1 | Ending Notice Chime2 | The Parade of the Tin Soldiers | If You're Happy and You Know It |
| Flea Waltz | Turkey in the Straw | The Battle Hymn of the Republic | J'ai perdu le do de ma clarinette |
| Can-can | Radetzky March | Funiculi, Funicula | Csikos Post |
| Polka Tramblanka | O Vreneli | KAERUNO GASSHOU | El Condor Pasa (If I Could) |
| Hungarian Dance No.5 | William Tell Overture | Pomp and Circumstance | Greensleeves |
| Nedelka | Moonlight Serenade | WAREWA UMINO KO | |
| The above 31 tones & 32 EHS type E tones are built-in | | | |

## Optional Parts

For details, see pages 182 to 187.

| Optional Parts | Model |
|---|---|
| SD card (2GB) | SDV-2GP |

- Alarm tones are denoted in characters for convenience' sake. Please check our website for more details.
- Tone group settings are described in the list of tones in the specification and general instruction manual, so please check our website for more details.

Use of Copyrighted Material

PATLITE Corporation has not applied for permission to use certain copyrighted music or songs recorded for Type-A, Type-C and Type-D melody charts outside of Japan. Therefore, please contact the local copyright association for permission before using the product in case this product is used outside of Japan. Melody chart Type-E is recommended for use outside of Japan as this playlist does not include copyrighted music or songs, and permission is not required.

# Specification

## EHS specifications

| Model | Rated Voltage | Operating Voltage Range | Rated Power Consumption | Sound Pressure Level | Operating Temperature Range | Playback Channel | Wiring method | Mass |
|---|---|---|---|---|---|---|---|---|
| **EHS-M1HA** | 12 - 24V DC | 10.8 - 35V DC | 5.0W (12V DC when using normally closed/NPN) 5.9W (24V DC when using normally open/PNP) | Alarm: maximum 110dB (at 1m)* | -20℃ to +50℃ (humidity 85% or less) | Bit input: 8 Binary input: 32 | Cabtire cable | 1.25kg±10% |
| **EHS-M1TA** | | | | | | | Terminal Block | |
| **EHS-M1TE** | | | | | | | | |
| **EHS-M2HA** | 100 - 240V AC | 90 - 264V AC | 6.9W (240V AC when using normally closed/NPN) | | | | Cabtire cable | |
| **EHS-M2T□** | | | | | | | Terminal Block | |
| **EHS-M3H□** | 12 - 48V DC | 10 - 60V DC | 5.1W (48V DC when using normally closed/NPN) | | | | Cabtire cable | |

*The sound pressure level changes based on tone, use environment, and working voltage.

## EHV specifications

| Model | Rated Voltage | Operating Voltage Range | Rated Power Consumption | Sound Pressure Level | Operating Temperature Range | Maximum Seconds of Playback | Playback Channel | Wiring method | Mass |
|---|---|---|---|---|---|---|---|---|---|
| **EHV-M1H□** | 12 - 24V DC | 10.8 - 35V DC | 4.0W (12V DC when using normally closed/NPN) 5.0W (24V DC when using normally open/PNP) | Alarm: maximum 110dB (at 1m)* MP3: maximum 105dB (at 1m)* (1kHz sine wave upon data playback) Standard bitrate: 64kbit/s Fs=44.1kHz | -20℃ to +50℃ (humidity 85% or less) | 220 s | Bit input: 8 Binary input: 63 | Cabtire cable | 1.25kg±10% |
| **EHV-M1H□M** | | | | | | | | Terminal Block | |
| **EHV-M1TG** | | | | | | | | | |
| **EHV-M1T□M** | | | | | | | | | |
| **EHV-M2H□** | 100 - 240V AC | 90 - 264V AC | 5.3W (240V AC when using normally closed/NPN) | | | | | Cabtire cable | |
| **EHV-M2H□M** | | | | | | | | | |
| **EHV-M2T□** | | | | | | | | Terminal Block | |
| **EHV-M2T□M** | | | | | | | | | |
| **EHV-M3H□** | 12 - 48V DC | 10 - 60V DC | 5.6W (48V DC when using normally closed/NPN) | | | | | Cabtire cable | |
| **EHV-M3H□M** | | | | | | | | | |

*The sound pressure level changes based on tone, use environment, and working voltage.

# Model Code

**EHV-M1HFM**

Model

| | |
|---|---|
| EHS | Audible Alarm Horn |
| EHV | MP3 Voice Annunciator Horn |

Rated Voltage

| | |
|---|---|
| M1 | 12 - 24V DC |
| M3 | 12 - 48V DC (mountable in vehicle) |
| M2 | 100 - 240V AC |

Wiring method

| | |
|---|---|
| H | Cable |
| T | Terminal Block |

*M3 specifications
H: cabtire cable specifications only

Tone type

| EHS | | EHV | |
|---|---|---|---|
| A | Type A | F | Type F |
| C | Type C | G | Type G |
| D | Type D | | |
| E | Type E | | |

Message recording

| | |
|---|---|
| Blank | None |
| M | Registered shipping of designated messages (EHV type only) |

# Wiring Diagram

■Wiring Example (Cable Type)

●Normally Closed Contact Wiring

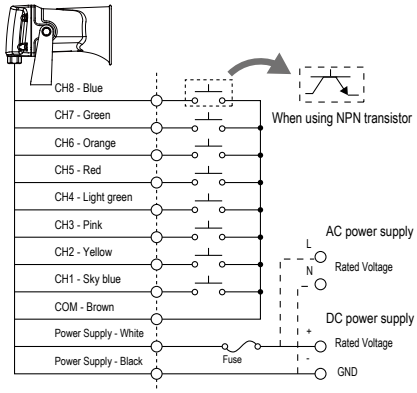


●When using normally open contact (only EH□-M1)

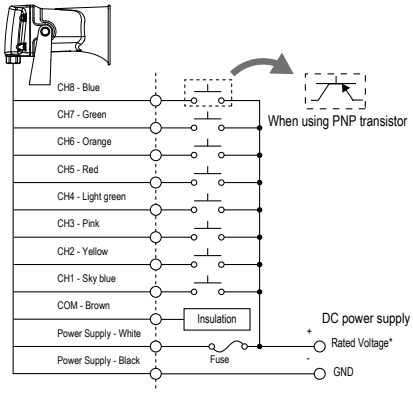


■Wiring Example (Terminal Block Type)

●Normally Closed Contact Wiring

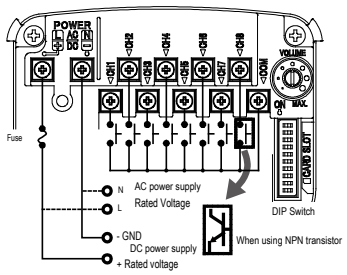


●Normally Open Contact Wiring (EH□-M1 only)

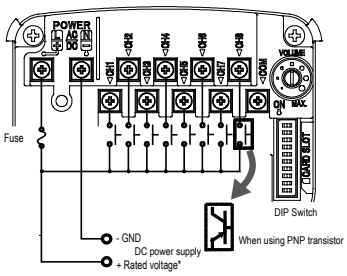


Signal Wire Contact Capacity

| | Normally closed contact | Normally open contact (EH□-M1) Applied voltage less than 26.4V | Normally open contact (EH□-M1) Applied voltage at least 26.4V |
|---|---|---|---|
| Current Capacity | 10mA or more | 10mA or more | 15mA or more |
| Withstand Voltage | At least 35V DC | | |
| Leakage Current | 0.1 mA or less | | |
| ON voltage (Vsat) | 1V or less | | |

Recommended fuses

| | Rated Voltage | Rated Current | Fusing type |
|---|---|---|---|
| EH□-M1 | 250V | 500mA | Normal A type |
| EH□-M2 | 250V | 800mA | Normal A type |
| EH□-M3 | 250V | 800mA | Normal A type |

Power supply inrush current

| | | | | | |
|---|---|---|---|---|---|
| EH□-M1 | 12.5A | EH□-M2 | 23A | EH□-M3 | 45A |

*Set input voltage to 10.8 - 31.6V DC for normally open contact input.
●We recommend using the following cable when wiring to a terminal block.
●Diameter: $\phi$ 8.5mm - $\phi$ 10.5mm / terminal: M3 round terminal with insulating layer; made by Japan Solderless Terminals N1.25-3 (RoHS compliant)

# Dimensions (mm)

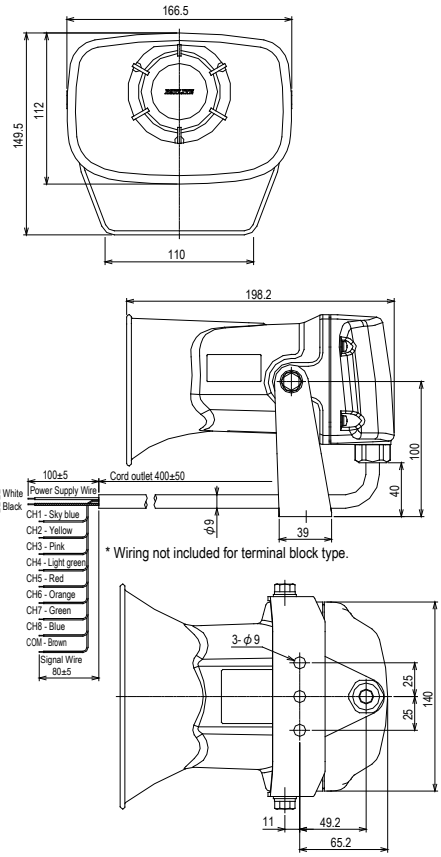


* Wiring not included for terminal block type.

(Units: mm)

# Conformity Standards

| | |
|---|---|
| M1 | EMC Directive (EN 61000-6-4, EN 61000-6-2) RoHS Directive (EN 50581) UL 464, CSA-C22.2 No. 205-M1983 FCC Part 15 Subpart B Class A KC (KN22, KN24) |
| M2 | UL 464, CSA-C22.2 No. 205-M1983 FCC Part 15 Subpart B Class A KC (KN22, KN24) |

There are no contents of controlled substances exceeding the threshold for the RoHS Directive.

| | |
|---|---|
| M3 | EMC Directive (EN 13309) ECE Regulation No. 10 |

There are no contents of controlled substances exceeding the threshold for the RoHS Directive.

MP3 File playback Circuit Board

# FV-127JP

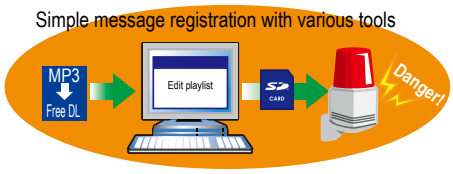


The FV Series circuit board is designed to add audible or voice message playback to various types of machinery. It can be installed inside or on the rear of a machine for a more streamlined design.

- Installs seamlessly on the inside of machinery
- Up to 240 minutes total playback time
- Audio files can be registered to 127 available channels
- Built-in sound reduction feature
- Built-in terminal block for easy wiring
- Speaker output included in the terminal

RoHS

## Specification

| Model | Rated Voltage | Operating Voltage Range | Power Consumption | External Contact Capacity | Operating Temperature Range | Contact Input Method | Number of playback channels | AUX Output | BUSY Output | Maximum Playback Time | Maximum Output | Output Load Impedance | Mass |
|---|---|---|---|---|---|---|---|---|---|---|---|---|---|
| **FV-127JP** | 24V DC | 19 - 29V DC | 15W | 35V15mA or more | -10℃ to +50℃ (humidity 85% or less) | Normally closed contact or NPN open corrector | When using binary input: 127; when using bit input: 7 | 0dBv 600Ω | Maximum load 40V DC 500mA | About 8 minutes of main unit memory (when using) | 4W | 8Ω | 160g±10% |

■Product price including the message registration fee (tax excluded)

*The above FV-127JP base price does not include the message registration fee.

FV-127JP-064 (001-064 phrases) FV-127JP-128 (065-128 phrases) FV-127JP-192 (129-192 phrases) FV-127JP-256 (193-256 phrases)
FV-127JP-320 (257-320 phrases) FV-127JP-384 (321-384 phrases) FV-127JP-448 (385-448 phrases) FV-127JP-512 (449-512 phrases)
Messages are free if you choose from over 3,000 standard messages. (An additional cost applies for other custom messages)

## Model Code

**FV-127JP**

- Model
- Maximum number of messages
  - 127: 127 messages
- Rated Voltage
  - J: 24V DC
- P: Printed circuit board type

## Optional Parts

For details, see pages 182 to 187.

| Optional Parts | Model |
|---|---|
| Speakers (2W 8Ω) | SPB-2E-W |
| Speakers (5W 8Ω) | SPB-5E |
| Speakers (5W 8Ω) | SPW-5E |
| Speakers (5W 8Ω) | SPL-5E |
| SD card (2GB) | SDV-2GP |

## Dimensions (mm)

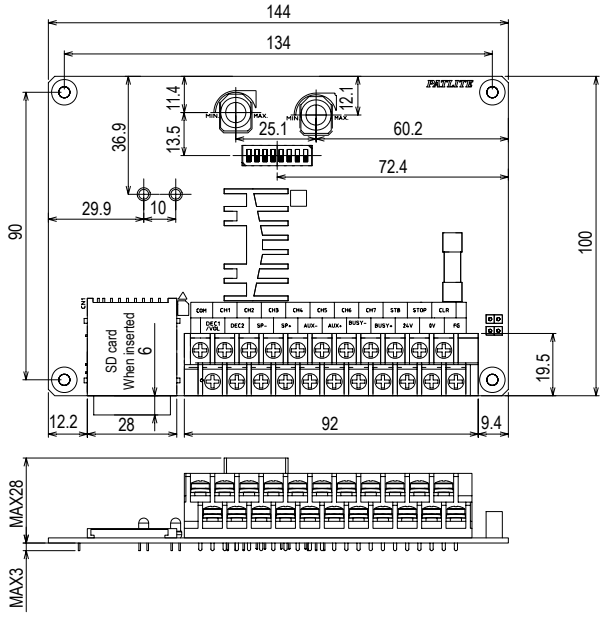

# Hybrid Signal Lights & Towers

| Page number | Page 157 | | | | | |
|---|---|---|---|---|---|---|
| Model Name | MP3 Voice Annunciator with LED Signal Tower | | | Audible Alarm with LED Signal Tower | | |
| Model | **LKEH-FV** | | | **LKEH-F□** | | |
| Product image | | | | | | |
| Rated Voltage | 24V DC | 100V AC | 220V AC | 24V DC | 100V AC | 220V AC |
| Size (mm) | ϕ100 | | | ϕ100 | | |
| IP | 53 | | | 53 | | |
| Sound pressure dB (at 1m) | 105 | | | 105 | | |
| Body | AES | | | AES | | |
| Globe | Polycarbonate | | | Polycarbonate | | |
| Light Source | LED | | | LED | | |
| Unit Structure | ○ | | | ○ | | |
| Terminal Block | | | | | | |
| Synthetic Sound | MP3 | | | | | |
| Electronic sound | | | | ○ | | |
| Message | Bit input 5/binary input 31 | | | | | |
| Tone | | | | Bit input 8/binary input 32 | | |
| Sound Reduction | ○ | | | ○ | | |
| Open collector | NPN | | | NPN | | |
| CE Marking | ○ | | | ○ | | |
| RoHS | ○ | | | ○ | | |
| UL standards | ○ (LKEH-FVUL) 24V DC only | | | ○ (LKEH-F□UL) 24V DC | | |
| Other characteristics | Enabled for SDV-2GP | | | only | | |

| Page number | Page 164 | | | Page 166 | | | Page 168 | | |
|---|---|---|---|---|---|---|---|---|---|
| Model Name | Audible Cube Tower | | | Audible Alarm with LED Revolving Warning Light | | | MP3 Voice Annunciator with LED Revolving Warning Light | | |
| Model | **KJT** | | | **RFT** | | | **RFV** | | |
| Product image | | | | | | | | | |
| Rated Voltage | 24V DC | 100V AC | 200V AC | 24V DC | 100V AC | 220V AC | 24V DC | 100V AC | 220V AC |
| Size (mm) | □116 | | | □115 | | | □115 | | |
| IP | 23 | | | 54 | | | 54 | | |
| Sound pressure dB (at 1m) | 90 *1 | | | 90 | | | 95 | | |
| Body | ABS | | | ABS | | | ABS | | |
| Globe | Acrylic | | | Polycarbonate | | | Polycarbonate | | |
| Light Source | Bulb | | | LED | | | LED | | |
| Unit Structure | | | | | | | | | |
| Terminal Block | | | | | | | | | |
| Synthetic Sound | | | | | | | MP3 | | |
| Electronic sound | ○ | | | ○ | | | | | |
| Message | | | | | | | Bit input 4/binary input 15 | | |
| Tone | Bit input 8/binary input 32 | | | Bit input 8/binary input 32 | | | | | |
| Sound Reduction | | | | ○ *2 | | | ○ | | |
| Open collector | NPN | | | NPN | | | NPN | | |
| CE Marking | | | | ○ | | | ○ | | |
| RoHS | | | | ○ | | | ○ | | |
| UL standards | | | | | | | | | |
| Other characteristics | | | | | | | Enabled for SDV-2GP | | |

*1 24V specifications 90dB (at 1m) 100V, 200V specifications 85dB (at 1m) *2 When using binary input

| Page number | Page 160 | | | Page 162 | | |
|---|---|---|---|---|---|---|
| Model Name | Horn Speaker Audible Alarm with Revolving Warning Light | | | Horn Speaker Audible Alarm with Revolving Warning Light | | |
| Model | **RT-A/C/D/E** | | | **RT-VF** | | |
| Product image | | | | | | |
| Rated Voltage | 24V DC | 100V AC | 200V AC | 24V DC | 100V AC | 200V AC |
| Size (mm) | ϕ 162 | | | ϕ 162 | | |
| IP | 23 | | | 23 | | |
| Sound pressure dB (at 1m) | 105 | | | 105 | | |
| Body | ABS | | | ABS | | |
| Globe | AS | | | AS | | |
| Light Source | Bulb | | | Bulb | | |
| Unit Structure | | | | | | |
| Terminal Block | | | | | | |
| Synthetic Sound | | | | MP3 | | |
| Electronic sound | ○ | | | | | |
| Message | | | | Bit input 4/binary input 15 | | |
| Tone | Bit input 8/binary input 32 | | | | | |
| Sound Reduction | | | | | | |
| Open collector | NPN | | | NPN | | |
| CE Marking | | | | | | |
| RoHS | | | | | | |
| UL standards | | | | ○ (RT-VFUL) | | |
| Other characteristics | | | | Enabled for SDV-2GP | | |

# LKEH

| | |
|---|---|
| Colors | Red, Amber, Green, Blue, White |
| Globe | Uses shock-resistant polycarbonate resin. |

The LKEH Series features a 100mm diameter signal tower, programmable voice signaling, with a 105dB horn for highly effective signaling.

- Ultra-bright, maintenance-free LEDs
- Up to 105dB sound output at 1m
- Vibration resistant up to 2G
- Message capacity up to 64 seconds with 5 channel bit input or 31 channel binary input
- IP53 protection rating
- Built-in sound reduction feature for quieter environments
- NPN/PNP compatible

Sound pressure 105dB | IP53 | RoHS | UL | CE | 100 φ

(UL specifications only) (only 24V)

## Voice type LKEH-FV

VOICE

- 63-second (at 64kbits/s) playback capacity with 5 channels with bit input or 31 channels with binary
- Field programmable with an SD card (SDV-2GP recommended, sold separately)
- SD card can be used to freely arrange messages in groups
- Easily accessible DIP switch to select binary or bit input and testing recorded messages

## Sound type LKEH-F□

SOUND

- 32 built-in sounds where 8 can be accessed with bit input and 32 with binary
- SD card can be used to freely arrange sounds into groups (SDV-2GP recommended, sold separately)
- Easily accessible DIP switch to select binary or bit input and testing built-in sounds

## Table of tones (sound type LKEH-F□)

Type A

| Beep | Stutter | Bell | Yelp |
|---|---|---|---|
| Rapid Hi-Lo | Melody Chime | Synthesized Piano | Synthesized Bell |
| Stutter & Bell | Synthesized Melody | Chime | Call Sign |
| Fur Elise | A Maiden's Prayer | Minuet in Gmjr | Annie Laurie |
| London bridge is falling down | Holdiridia | Mary had a little Lamb | Camptown Races |
| Cuckoo Song | Village Blacksmith | On the Avignon Bridge | Daydream Believer |
| Amaryllis | Mozart Symphony No.40 | Quiet Lakeside | Mountain Musician |
| Spanish Romance | Katyusha | Grandfather's Clock | Ave Maria |

Type C

| Beep | Stutter | Bell | Yelp |
|---|---|---|---|
| Rapid Hi-Lo | Melody Chime | Synthesized Piano | Synthesized Bell |
| Stutter & Bell | Synthesized Melody | Chime | Call Sign |
| Can't take my eyes off of You | Top of the World | The Entertainer | Amazing Grace |
| Maiden with the flaxen hair | Aux Champs-Elysees | Canon | La-la Sunshine |
| Space Battleship Yamato | Oshiete | Makenai de | Theme Song |
| I Don't Want to Miss a Thing | Yozora no Mukou | Ai wa Katsu | Truth |
| Guts Daze!! | Odoru Ponpokorin | Ima sugu Kiss Me | Haru yo, Koi |

Type D

| Beep | Stutter | Bell | Yelp |
|---|---|---|---|
| Rapid Hi-Lo | Melody Chime | Synthesized Piano | Synthesized Bell |
| Runner | Mamotte Agetai | Chime | Call Sign |
| While listening to Olivia | September | Douyobi no Koibito | Aki no Kihai |
| Surf Tengoku, Ski Tengoku | Iro, White Blend | Happy Birthday | Hi Ho |
| I've been working on the Railroad | The Bear Song | Toys Go Cha-Cha-Cha | Konnako Irukana |
| Shubert's Lullaby | Rudolph the Red-nosed Reindeer | She Wore a Yellow Ribbon | My Darling Clementine |
| Yellow Rose of Texas | Yankee Doodle | When the Saints Go Marching In | Londonderry Aire |

Type E

| Beep | Stutter | Bell | Yelp |
|---|---|---|---|
| Rapid Hi-Lo | Melody Chime | Synthesized Piano | Synthesized Bell |
| Stutter & Bell | Synthesized Melody | Chime | Call Sign |
| Bee-boh sound | Galloping Hi-Lo | Alien Chatter | Falling Crystals |
| Inverted Reveille x3 | Galactic Motor | Ringing Phone | Two Tone |
| Alarm Clock | Ringing Hi-Lo | Fur Elise | Minuet in Gmjr |
| Annie Laurie | London bridge is falling down | Mary had a little Lamb | Camptown Races |
| Amaryllis | Mozart Symphony No.40 | Ave Maria | Grandfather's Clock |

JASRAC T-06B0152 T-0710139 T-0710140 NexTone

●Bit input → plays 8 sounds (see instruction manual for 8 sound grouping) Binary input → plays 32 sounds
●Alarm tones are denoted in characters for convenience' sake. Please inquire about actual tones or check our website for more details.

Use of Copyrighted Material
PATLITE Corporation has not applied for permission to use certain copyrighted music or songs recorded for Type-A, Type-C and Type-D melody charts outside of Japan. Therefore, contact the local copyright association for permission before using the product outside Japan.

## Model Code

**LKEH-402FVUL-RYGB**

Model
Number of tiers (tiers 1-4)
Rated Voltage

| | |
|---|---|
| 02 | 24V DC |
| 10 | 100V AC |
| 20 | 220V AC |

Specification

| | |
|---|---|
| FV | Synthesized Sound |
| FA, FC, FD, FE | 32 Pre-programmed Sounds |

Conformity Standards

| | |
|---|---|
| UL | UL model |

Colors (From Top to Bottom)

| | |
|---|---|
| R | Red |
| Y | Amber |
| G | Green |
| B | Blue |
| C | White |

## Optional Parts

For details, see pages 182 to 187.

| Optional Parts | Model |
|---|---|
| Wallmount Bracket | SZ-023 |
| Wallmount Bracket | SZ-008 |
| SD card (2GB) | SDV-2GP |

The following custom specifications are available.
●PNP open corrector specifications

# Specifications

Colors not listed in stock products, and any products other than stock products are made-to-order.

## LKEH-FV specifications

| (Number of flashes...about 60/min) | | | | | | | | | | | |
|---|---|---|---|---|---|---|---|---|---|---|---|
| | Model | Rated Voltage | Operating Voltage Range | Number of tiers | Power Consumption | Sound Pressure Level | Audio File | Operating temperature range | Maximum Seconds of Playback | Number of messages | Mass |
| Voice type | **LKEH-102FV** | 24V DC | 24V DC±10% | 1 | 10.6W | Maximum 105 dB (at 1m) | MPEG1-AudioLayer Ⅲ (MP3)Standard bitrate : 64kbit/s, Fs=44.1kHz | -10℃ to +50℃ (humidity 85% or less) | 63 s | 5 (bit input) 31(binary input) | 1.4kg |
| | **LKEH-202FV** | | | 2 | 12.4W | | | | | | 1.6kg |
| | **LKEH-302FV** | | | 3 | 14.2W | | | | | | 1.8kg |
| | **LKEH-402FV** | | | 4 | 16.0W | | | | | | 2.0kg |
| | **LKEH-110FV** | 100V AC | 100V AC±10% | 1 | 17W | | | | | | 2.1kg |
| | **LKEH-210FV** | | | 2 | 20W | | | | | | 2.3kg |
| | **LKEH-310FV** | | | 3 | 23W | | | | | | 2.5kg |
| | **LKEH-410FV** | | | 4 | 26W | | | | | | 2.7kg |
| | **LKEH-120FV** | 220V AC | 220V AC±10% | 1 | 17W | | | | | | 2.1kg |
| | **LKEH-220FV** | | | 2 | 20W | | | | | | 2.3kg |
| | **LKEH-320FV** | | | 3 | 23W | | | | | | 2.5kg |
| | **LKEH-420FV** | | | 4 | 26W | | | | | | 2.7kg |

(Note) The indicated sound pressure level is the maximum volume (synthetic sound type: sine wave (1KHz)) and the actual level may be lower than the indicated sound pressure level due to message content, tone, and voltage fluctuations.*When using multiple units, there may be variation in the playback sound even when started simultaneously with the tone and voice. This product is not for mounting on a vehicle.

## LKEH-FVUL specifications (UL certified model)

| (Number of flashes...about 60/min) | | | | | | | | | | | |
|---|---|---|---|---|---|---|---|---|---|---|---|
| | Model | Rated Voltage | Operating Voltage Range | Number of tiers | Power Consumption | Sound Pressure Level | Audio File | Operating temperature range | Maximum Seconds of Playback | Number of messages | Mass |
| Voice type | **LKEH-102FVUL** | 24V DC | 24V DC±10% | 1 | 10.6W | Maximum 105 dB (at 1m) | MPEG1-AudioLayer Ⅲ (MP3)Standard bitrate : 64kbit/s, Fs=44.1kHz | -10℃ to +50℃ (humidity 85% or less) | 63 s | 5 (bit input) 31 (binary input) | 1.4kg |
| | **LKEH-202FVUL** | | | 2 | 12.4W | | | | | | 1.6kg |
| | **LKEH-302FVUL** | | | 3 | 14.2W | | | | | | 1.8kg |
| | **LKEH-402FVUL** | | | 4 | 16.0W | | | | | | 2.0kg |

(Note) The indicated sound pressure level is the maximum volume (synthetic sound type: sine wave (1KHz)) and the actual level may be lower than the indicated sound pressure level due to message content, tone, and voltage fluctuations.*When using multiple units, there may be variation in the playback sound even when started simultaneously with the tone and voice. This product is not for mounting on a vehicle.

## LKEH-F□specifications

| (Number of flashes...about 60/min) | | | | | | | | |
|---|---|---|---|---|---|---|---|---|
| | Model | Rated Voltage | Operating Voltage Range | Number of tiers | Power Consumption | Sound Pressure Level | Operating temperature range | Playback Channel | Mass |
| Sound type | **LKEH-102FA** | 24V DC | 24V DC±10% | 1 | 10.6W | Maximum 105 dB (at 1m) | -10℃ to +50℃ (humidity 85% or less) | 8 (bit input) 32 (binary input) | 1.4kg |
| | **LKEH-202FA** | | | 2 | 12.4W | | | | 1.6kg |
| | **LKEH-302FA** | | | 3 | 14.2W | | | | 1.8kg |
| | **LKEH-402FA** | | | 4 | 16W | | | | 2.0kg |
| | **LKEH-110FA** | 100V AC | 100V AC±10% | 1 | 17W | | | | 2.1kg |
| | **LKEH-210FA** | | | 2 | 20W | | | | 2.3kg |
| | **LKEH-310FA** | | | 3 | 23W | | | | 2.5kg |
| | **LKEH-410FA** | | | 4 | 26W | | | | 2.7kg |
| | **LKEH-120FA** | 220V AC | 220V AC±10% | 1 | 17W | | | | 2.1kg |
| | **LKEH-220FA** | | | 2 | 20W | | | | 2.3kg |
| | **LKEH-320FA** | | | 3 | 23W | | | | 2.5kg |
| | **LKEH-420FA** | | | 4 | 26W | | | | 2.7kg |

*Changes the sound pressure level based on tones, use environment, and working voltage.
*When using multiple units, there may be variation in the playback sound even when started simultaneously with the tone. This product is not for mounting on a vehicle.

## LKEH-FVUL specifications (UL certified model)

| (Number of flashes...about 60/min) | | | | | | | | | |
|---|---|---|---|---|---|---|---|---|---|
| | Model | Rated Voltage | Operating Voltage Range | Number of tiers | Power Consumption | Sound Pressure Level | Operating temperature range | Playback Channel | Mass |
| Sound type | **LKEH-102FAUL/FCUL/FDUL/FEUL** | 24V DC | 24V DC±10% | 1 | 10.6W | Maximum 105 dB (at 1m) | -10℃ to +50℃ (humidity 85% or less) | 8 (bit input) 32 (binary input) | 1.4kg |
| | **LKEH-202FAUL/FCUL/FDUL/FEUL** | | | 2 | 12.4W | | | | 1.6kg |
| | **LKEH-302FAUL/FCUL/FDUL/FEUL** | | | 3 | 14.2W | | | | 1.8kg |
| | **LKEH-402FAUL/FCUL/FDUL/FEUL** | | | 4 | 16W | | | | 2.0kg |

*Changes the sound pressure level based on tones, use environment, and working voltage.
*When using multiple units, there may be variation in the playback sound even when started simultaneously with the tone. This product is not for mounting on a vehicle.

●The standard price of 1-3 tier specifications applies to Red, Amber, and Green combination.
● The price for 4 tier model is for Red, Amber, and Green, plus Blue and White only.
●There is an additional per-unit cost when using Blue or White instead of Red, Amber, and Green.

### ■Replacement Parts for Changing Colors

| Replacement Parts | Part Number |
|---|---|
| Red globe unit | B72100151-1F1 |
| Amber globe unit | B72100151-2F1 |
| Green globe unit | B72100151-3F1 |
| Blue globe unit | B72100151-4F1 |
| White globe unit | B72100151-7F1 |
| Shaft for 1 tier | B62910033-1F2 |
| Shaft for 2 tier | B62910033-2F2 |
| Shaft for 3 tier | B62910033-3F2 |
| Shaft for 4 tier | B62910033-4F2 |

# Dimensions (mm)

LKEH-FV/LKEH-F□

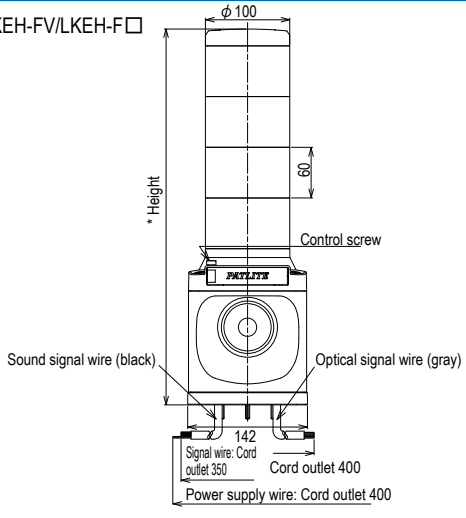


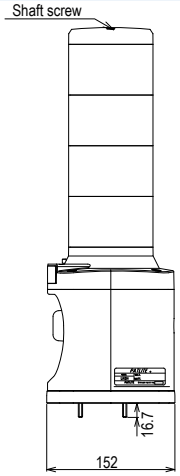


| * Height |
|---|
| 1 tier: 265.2 |
| 2 tier: 325.3 |
| 3 tier: 385.4 |
| 4 tier: 445.5 |

Installation Dimension Drawings

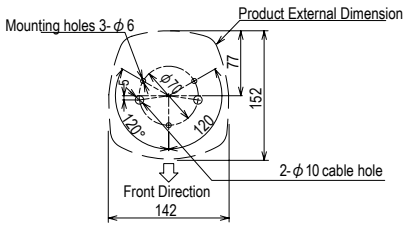

# Wiring Diagram

## LKEH-FV type

●Use a normally closed contact circuit such as a relay switch, or an open collector circuit (NPN type) for the external contact on the signal wire. See the table below for circuit and contact capacity.

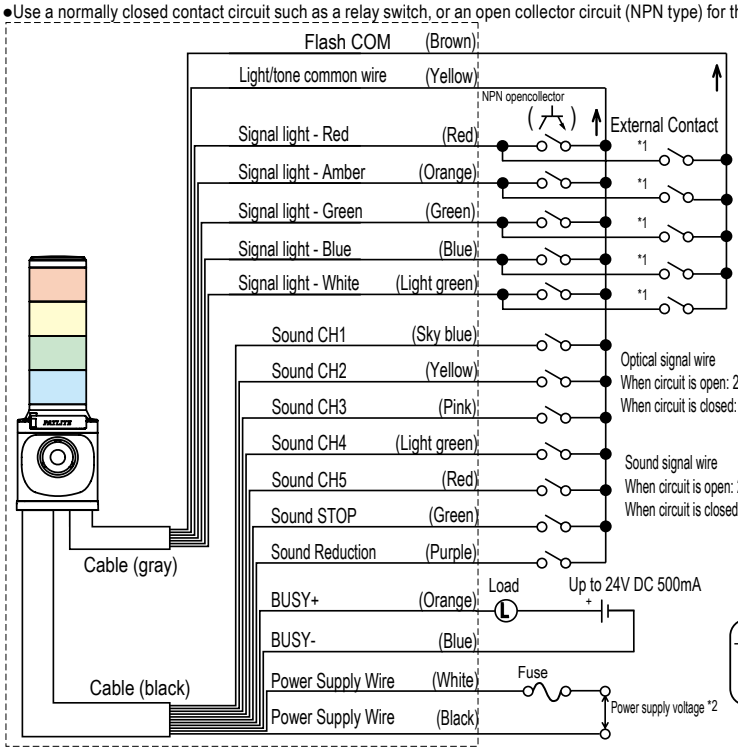


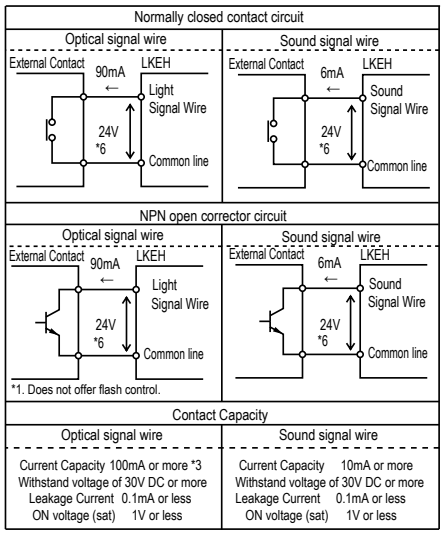


| Model | Rated Voltage | Inrush current *4 | Fuse capacity *5 |
|---|---|---|---|
| LKEH-☐02FV | 24V DC | 10A | 2A (normal) |
| LKEH-☐10FV | 100V AC | 12A | 0.5A (time lag) |
| LKEH-☐20FV | 220V AC | 6A | 0.5A (normal) |

*Do not apply voltage to each wire. This may damage the product.

*1. Flashing control is for non-voltage contact circuit applications only.
*2. For the LKEH- ☐ 02FV, connect the Power Supply (Black) to the negative terminal. For the LKEH- ☐ 02UL (UL Standard), connect to a Class 2 power supply.
*3. Indicates the rated contact capacity per LED light unit.
*4. Rated at maximum operating voltage when power is first switched on.
*5. Use a slow-blow fuse for the LKEH- ☐ 10FV. If a fast-blow type is used, there is a risk of blowing the fuse from the inrush current.
*6. Indicates the supply voltage of the LKEH-☐02FV.

●When using multiple units, there may be variation in voice playback and flash cycle even when the power supply or signal wire is entered simultaneously.
●Do not short circuit the sound and signal light wire together to the flash common wire. Sound and voice will not play properly.
●Do not connect the common wire to the flash common wire. The signal light unit will stop flashing normally.

## LKEH-F☐type

●Use a normally closed contact circuit such as a relay switch, or an open corrector circuit (NPN type) for the external contact on the signal wire. See the table below for circuit and contact capacity.

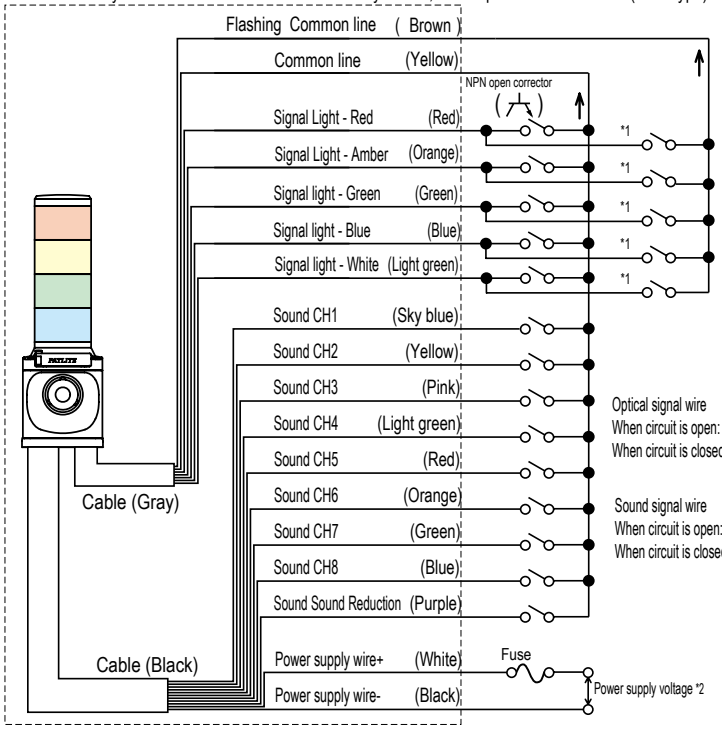


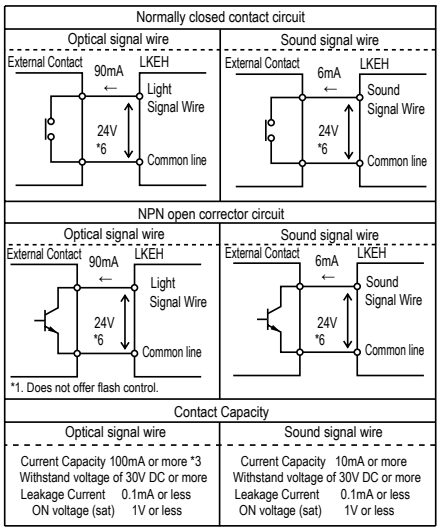


| Model | Rated Voltage | Inrush current *4 | Fuse capacity *5 |
|---|---|---|---|
| LKEH-☐02 | 24V DC | 10A | 2A (normal) |
| LKEH-☐10 | 100V AC | 12A | 0.5A (time lag) |
| LKEH-☐20 | 220V AC | 6A | 0.5A (normal) |

*Do not apply voltage to each wire. This may damage the product.

*1. Flashing control is for non-voltage contact circuit applications only.
*2. For the LKEH- □ 02, connect the Power Supply (Black) to the negative terminal. For the LKEH- ☐ 02UL (UL Standard), connect to a Class 2 power supply.
*3. Indicates the rated contact capacity per LED light unit.
*4. Rated at maximum operating voltage when power is first switched on.
*5. Use a slow-blow fuse for the LKEH- □ 10. If a fast-blow type is used, there is a risk of blowing the fuse from the inrush current.
*6. Indicates the supply voltage of the LKEH-□02.

●When using multiple units, there may be variation in toneplayback and flash cycle even when the power supply orsignal wire is entered simultaneously.
●Do not short circuit the sound and signal light wire together to the flash common wire. Sound and voice will not playproperly.
●Do not connect the common wire to the flash common wire. The signal light unit will stop flashing normally.

# RT-A/C/D/E

Sound pressure 105dB | IP23 | 162φ

| | |
|---|---|
| Colors | Red, Amber, Green, Blue |
| Globe | Acrylic resin with superior weather resistance and translucency. |

The RT Series features a 162mm diameter rotating incandescent light, pre-loaded alarm sounds, with a 105dB horn for highly effective signaling.

- Comes pre-loaded with 32 tone and alarm sounds
- High weather resistance for outdoor use
- Up to 105dB sound output at 1m
- IP65 rating for dust and water resistance
- Easily accessible volume control
- Comes in multiple voltages
- NPN compatible

## Table of tones

### ■RT-A/C/D/E type

Electronic sound

- 32 built-in tones available in four sets: A, C, D and E
- Selector switch to playback 8 sounds with bit input method or 32 sounds with binary.

Type A

| Beep | Stutter | Bell | Yelp |
|---|---|---|---|
| Rapid Hi-Lo | Melody Chime | Synthesized Piano | Synthesized Bell |
| Stutter & Bell | Synthesized Melody | Chime | Call Sign |
| Fur Elise | A Maiden's Prayer | Minuet in Gmjr | Annie Laurie |
| London bridge is falling down | Holdiridia | Mary had a little Lamb | Camptown Races |
| Cuckoo Song | Village Blacksmith | On the Avignon Bridge | Daydream Believer |
| Amaryllis | Mozart Symphony No.40 | Quiet Lakeside | Mountain Musician |
| Spanish Romance | Katyusha | Grandfather's Clock | Ave Maria |

Type C

| Beep | Stutter | Bell | Yelp |
|---|---|---|---|
| Rapid Hi-Lo | Melody Chime | Synthesized Piano | Synthesized Bell |
| Stutter & Bell | Synthesized Melody | Chime | Call Sign |
| Can't take my eyes off of You | Top of the World | The Entertainer | Amazing Grace |
| Maiden with the flaxen hair | Aux Champs-Elysees | Canon | La-la Sunshine |
| Space Battleship Yamato | Oshiete | Makenai de | Theme Song |
| I Don't Want to Miss a Thing | Yozora no Mukou | Ai wa Katsu | Truth |
| Guts Daze!! | Odoru Ponpokorin | Ima sugu Kiss Me | Haru yo, Koi |

Type D

| Beep | Stutter | Bell | Yelp |
|---|---|---|---|
| Rapid Hi-Lo | Melody Chime | Synthesized Piano | Synthesized Bell |
| Runner | Mamotte Agetai | Chime | Call Sign |
| While listening to Olivia | September | Douyobi no Koibito | Aki no Kihai |
| Surf Tengoku, Ski Tengoku | Iro, White Blend | Happy Birthday | Hi Ho |
| I've been working on the Railroad | The Bear Song | Toys Go Cha-Cha-Cha | Konnako Irukana |
| Shubert's Lullaby | Rudolph the Red-nosed Reindeer | She Wore a Yellow Ribbon | My Darling Clementine |
| Yellow Rose of Texas | Yankee Doodle | When the Saints Go Marching In | Londonderry Aire |

Type E

| Beep | Stutter | Bell | Yelp |
|---|---|---|---|
| Rapid Hi-Lo | Melody Chime | Synthesized Piano | Synthesized Bell |
| Stutter & Bell | Synthesized Melody | Chime | Call Sign |
| Bee-boh sound | Galloping Hi-Lo | Alien Chatter | Falling Crystals |
| Inverted Reveille x3 | Galactic Motor | Ringing Phone | Two Tone |
| Alarm Clock | Ringing Hi-Lo | Fur Elise | Minuet in Gmjr |
| Annie Laurie | London bridge is falling down | Mary had a little Lamb | Camptown Races |
| Amaryllis | Mozart Symphony No.40 | Ave Maria | Grandfather's Clock |

Use of Copyrighted Material

PATLITE Corporation has not applied for permission to use certain copyrighted music or songs recorded for Type-A, Type-C and Type-D melody charts outside of Japan. Therefore, contact the local copyright association for permission before using the product outside Japan.

- Bit input → plays 8 sounds (see instruction manual for 8 sound grouping) Binary input → plays 32 sounds
- Alarm tones are denoted in characters for convenience. Please inquire about actual tones or check our website for more details.

## Specifications

| | Model | Rated Voltage | Operating Voltage Range | Power Consumption | Bulb | Number | Number of flashes | Sound Pressure Level | External Contact Capacity | Operating Temperature Range | Contact Input Method | Playback Channel | Protection Rating | Quality |
|---|---|---|---|---|---|---|---|---|---|---|---|---|---|---|
| Electronic Sound | RT-24A-R/-Y | 24V DC | 21 - 27V DC | 24W | 24V 20W | 55 | 115/minute | Maximum 105dB (at 1m) | 10mA or more | -20℃ - +50℃ (humidity 85% or less) | Normally closed contact input (1 bit per 9 points) | Bit input 8 Binary input 32 | IP23 | 2.0kg |
| | RT-100A-R/-Y | 100V AC | 90 - 110V AC | 32W | 12V 15W | 54 | 105/minute | | | | | | | 2.5kg |
| | RT-200A-R/-Y | 200V AC | 180 - 240V AC | 30W | | | 95/minute | | | | | | | |

Bulb Shape・・・glass bulb G18 base BA15S

(Note) The indicated sound pressure level is at maximum volume and the actual level may be lower than the indicated sound pressure level due to tone and voltage fluctuations.

*When using multiple units, there may be variation in the playback sound even when started simultaneously.

## Model Code

**RT-24A-R**

Model

Rated Voltage

| | |
|---|---|
| 24 | 24V DC |
| 100 | 100V AC |
| 200 | 200V AC |

Tone type

| | |
|---|---|
| A | Type A |
| C | Type C |
| D | Type D |
| E | Type E |

Colors

| | |
|---|---|
| R | Red |
| Y | Amber |
| G | Green |
| B | Blue |

## Optional Parts

For details, see pages 182 to 187.

| Optional Parts | Model |
|---|---|
| Wall Mount Bracket | SZ-023 |
| Wall Mount Bracket | SZ-008 |

| Light bulb No. | Model |
|---|---|
| 54 | D01201503-F1 |
| 55 | D02402003-F1 |

*Light bulbs come in packs of 10.

*Stock for some light bulbs may be limited, as products become discontinued. We ask for your understanding in this regard.

## Dimensions (mm)

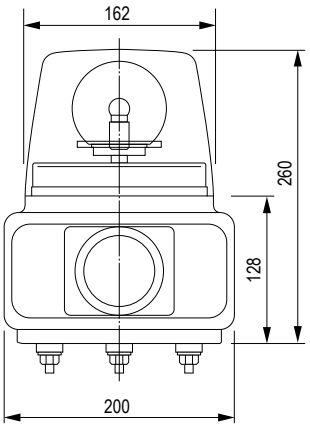


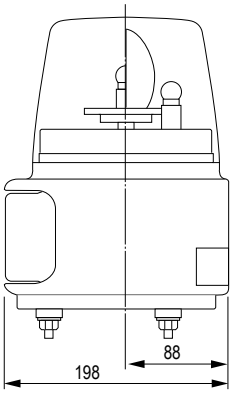


Installation Dimension Drawings

Front Direction

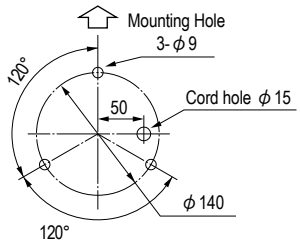


## Wiring Diagram

RT-A/C/D/E types

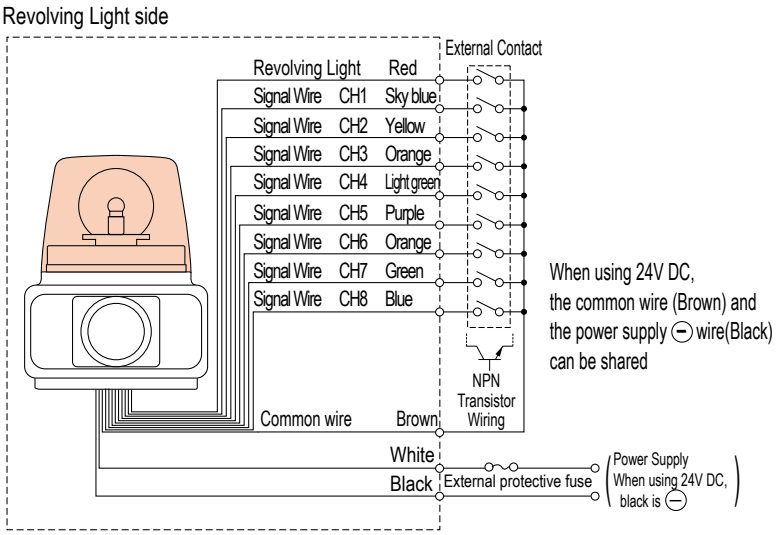


### ■Channel Priority

CH8 (Blue) > CH7 (Green) > CH6 (Orange) > CH5 (Purple) > CH4 (Light green) > CH3 (Pink) > CH2 (Yellow) > CH1 (Sky blue)

*If multiple signals are input simultaneously, it will prioritize the channel with the highest number.

| Model | Inrush Current | Fuse |
|---|---|---|
| **RT-24** | Maximum 10A/20ms | 250V 2A |
| **RT-100** | None | 250V 0.5A |
| **RT-200** | None | 250V 0.5A |

| Power supply voltage | RT-A/C/D/E |
|---|---|
| 100V AC<br>200V AC | Revolving light, sound signal wire<br>When circuit is open: DC18V<br>When circuit is closed: maximum 6mA |
| 24V DC | Revolving light, sound signal wire<br>When circuit is open: 24V<br>When circuit is closed: maximum 6mA |

*Also connectable with an NPN open collector transistor.

RT-24☐

Rated cross sectional area : Wire type : Wire length
Power supply wire : 0.75mm² : CKVV : 320mm
Signal wire : 0.3mm² : CKVV : 300mm

RT-100☐/200☐

Power supply wire : 0.75mm² : VCTF : 320mm
Signal wire : 0.3mm² : CKVV : 300mm

# RT-VF

| | |
|---|---|
| Colors | Red, Amber, Green, Blue |
| Globe | Acrylic resin with superior weather resistance and translucency. |

■RT-VF/VFUL

The RT-VF Series features a 162mm diameter rotating incandescent light, programmable voice signaling, with a 105dB horn for highly effective signaling.

- High weather resistance for outdoor use
- Up to 105dB sound output at 1m
- Message capacity up to 63 seconds with 5 channel bit input or 31 channel binary input
- IP65 rating for dust and water resistance
- Easily accessible volume control
- Comes in multiple voltages
- NPN compatible

Sound pressure 105dB | IP23 | UL | 162φ

(UL specifications only)

## Specifications

### RT-VF specifications

| Model | Rated Voltage | Operating Voltage Range | Power Consumption | Bulb | Number | Number of flashes | Sound Pressure Level | External Contact Capacity | Operating Temperature Range | Contact Input Method | Playback Channel | Protection Rating | Quality |
|---|---|---|---|---|---|---|---|---|---|---|---|---|---|
| **RT-24VF** | 24V DC | 21 - 27V DC | 24W | 24V 20W | 55 | 115/minute | Maximum 105dB (at 1m) | 10mA or more | -10 ℃ to +50 ℃ (humidity 85% or less) | Normally closed contact input (1 bit per 6 points) | Bit input: 4<br>Binary input: 15<br>When using sound reduction mode<br>Bit input: 3<br>Binary input: 7 | IP23 | 2.0kg |
| **RT-100VF** | 100V AC | 90 - 110V AC | 32W | 12V 15W | 54 | 105/minute | | | | | | | 2.4kg |
| **RT-200VF** | 200V AC | 180 - 240V AC | 30W | | | 95/minute | | | | | | | |

Bulb Shape・・・glass bulb G18 base BA15S

(Note) The indicated sound pressure level is the maximum volume (sine wave (1KHz)) and the actual level may be lower than the indicated sound pressure level due to message content, tone, and voltage fluctuations. *When using multiple units, there may be variation in the playback sound even when started simultaneously with the tone and voice.

### RT-VFUL specifications (UL certified model)

| Model | Rated Voltage | Operating Voltage Range | Power Consumption | Bulb | Number | Number of flashes | Sound Pressure Level | External Contact Capacity | Operating Temperature Range | Contact Input Method | Playback Channel | Protection Rating | Quality |
|---|---|---|---|---|---|---|---|---|---|---|---|---|---|
| **RT-24VFUL** | 24V DC | 21 - 27V DC | 24W | 24V 20W | 55 | 115/minute | Maximum 105dB (at 1m) | 10mA or more | -10 ℃ to +50 ℃ (humidity 85% or less) | Normally closed contact input (1 bit per 6 points) | Bit input: 4<br>Binary input: 15<br>When using sound reduction mode<br>Bit input: 3<br>Binary input: 7 | IP23 | 2.0kg |

Bulb Shape・・・glass bulb G18 base BA15S

(Note) The indicated sound pressure level is the maximum volume (sine wave (1KHz)) and simultaneously indicated sound pressure level due to message content, tone, and voltage fluctuations.
*When using multiple units, there may be variation in the playback sound even when started simultaneously with the tone and voice.

## Model Code

**RT-24VFUL-R**

Model

Rated Voltage

| | |
|---|---|
| 24 | 24V DC (RT-VF/RT-VFUL type) |
| 100 | 100V AC (RT-VF type) |
| 200 | 200V AC (RT-VF type) |

Sound and voice specifications

| | |
|---|---|
| VF | Synthesized Sound |
| VFUL | Synthesized Sound (UL certified model) |

Colors

| | |
|---|---|
| R | Red |
| Y | Amber |
| G | Green |
| B | Blue |

## Optional Parts

For details, see pages 182 to 187.

| Optional Parts | Model |
|---|---|
| Wall Mount Bracket | SZ-023 |
| Wall Mount Bracket | SZ-008 |
| SD card (2GB) | SDV-2GP |

| Light bulb No. | Model |
|---|---|
| 54 | D01201503-F1 |
| 55 | D02402003-F1 |

*Light bulbs come in packs of 10.
*Stock for some light bulbs may be limited, as products become discontinued. We ask for your understanding in this regard.

## Dimensions (mm)

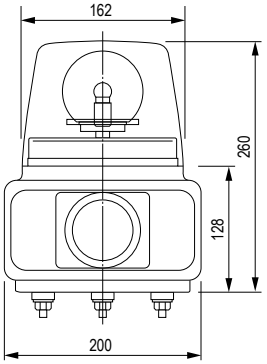


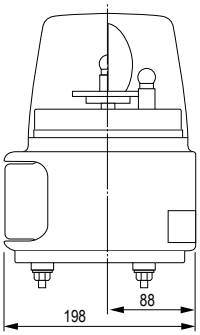


Installation Dimension Drawings

Front Direction

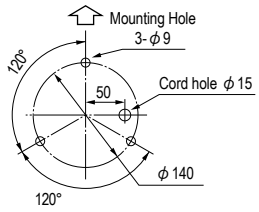


## Wiring Diagram

### RT-VF/VFUL

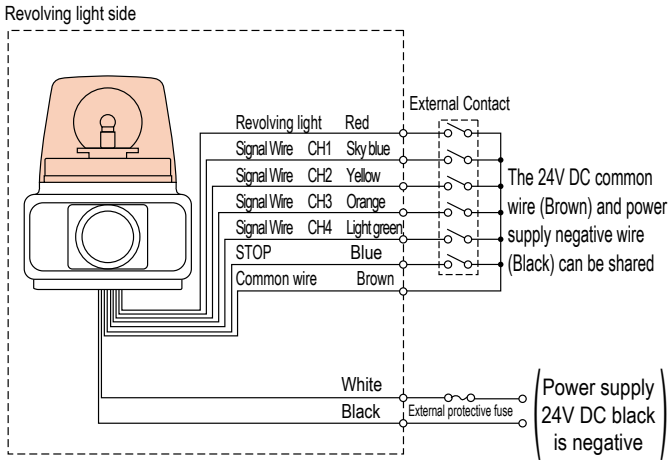


■Channel Priority

STOP (Blue) > CH4 (Light green) > CH3 (Orange) > CH2 (Yellow) > CH1 (Sky blue)

*If multiple signals are input simultaneously, it will prioritize the channel with the highest number.

The beginning of the message may be cut off when starting a message with the ON/OFF power supply switch.

| Model | Fuse |
|---|---|
| RT-24VF | 250V 2A |
| RT-100VF | 250V 0.5A |
| RT-200VF | 250V 0.5A |

| Power supply voltage | RT-VF |
|---|---|
| 100V AC<br>200V AC | When circuit is open: 18V<br>When circuit is closed: 6mA |
| 24V DC | When circuit is open: power supply voltage<br>When circuit is closed: 6mA |

*Also connectable with an NPN open collector transistor.

RT-24VF, RT-24VFUL

Rated cross-sectional area : Wire type : Wire length
Power supply wire : 0.75mm² : CKVV : 320mm
Signal wire : 0.3mm² : UL1007 : 300mm

RT-100VF, RT-200VF

Rated cross-sectional area : Wire type : Wire length
Power supply wire : 0.75mm² : VCTF : 320mm
Signal wire : 0.3mm² : CKVV : 300mmm

## Playback mode (-VF/-VFUL)

Select various playback modes based on their application.

| | | |
|---|---|---|
| A | Bit input mode | Plays back up to 4 messages using Channels 1 to 4. |
| B | Binary input mode | Plays back up to 15 messages using Channels 1 to 4. |
| C | Bit input sound reduction mode | Plays back up to 3 messages using Channels 1 to 3.<br>When Channel 4 receives an input, the volume is reduced by about -10dB. |
| D | Binary input sound reduction mode | Plays back up to 7 messages using Channels 1 to 3.<br>When Channel 4 receives an input, the volume is reduced by about -10dB. |
| E | Playback prioritizing bit input subsequent input Mode | Plays back up to 7 messages using Channels 1 to 3.<br>If a message input occurs during playback of another message, the message will stop and allow the input message to play back. |
| F | Playback mode prioritizing binary input subsequent input | Plays back up to 15 messages using Channels 1 to 4.<br>If a message input occurs during playback of another message, the message will stop and allow the input message to play back. |
| G | Bit input hold playback mode | Plays back up to 4 messages using Channels 1 to 4.<br>As long as the input continues, the message keeps playing.<br>Once the input is removed, the message playback stops." |
| H | Binary input hold playback mode | Plays back up to 15 messages using Channels 1 to 4.<br>As long as the input continues, the message keeps playing.<br>Once the input is removed, the message playback stops." |
| I | Test mode | Plays back Message No. 1 |

# KJT

| | |
|---|---|
| Colors | Red, Amber, Green, Blue |
| Globe | Uses acrylic resin with superior weather resistance and translucency. |

The KJT Series features an 116mm width, a 90dB audible alarm, and comes in multiple voltages.

- Incandescent bulb light source type
- Up to 90dB audible alarm at 1m
- Easily accessible volume control
- Modular design for field customizing
- NPN compatible

*1 sound pressure maximum values: 24V models: 90dB (at 1m); 100V, 200V models 85dB (at 1m).
Sound pressure values change, based on tones and surrounding environment.

Sound pressure 90dB (24V model) | IP23 | 116 mm

● Standard Colors:
1-Tier model / Red (-R), Amber (-Y), Green (-G)
2-Tier model / Red-Amber (-RY), Red-Green (-RG)
3-Tier model / Red-Amber-Green (-RYG)

## Table of tones

### ■KJT-A/C/D/E type

Electronic sound

●We provide 32 built-in sounds per unit across 4 types: A, C, D, and E.
●Enabled to play 8 sounds with a bit input method and 32 sounds with a binary input method using selection switch settings.

Type A

| Beep | Stutter | Bell | Yelp |
|---|---|---|---|
| Rapid Hi-Lo | Melody Chime | Synthesized Piano | Synthesized Bell |
| Stutter & Bell | Synthesized Melody | Chime | Call Sign |
| Fur Elise | A Maiden's Prayer | Minuet in Gmjr | Annie Laurie |
| London bridge is falling down | Holdiridia | Mary had a little Lamb | Camptown Races |
| Cuckoo Song | Village Blacksmith | On the Avignon Bridge | Daydream Believer |
| Amaryllis | Mozart Symphony No.40 | Quiet Lakeside | Mountain Musician |
| Spanish Romance | Katyusha | Grandfather's Clock | Ave Maria |

Type C

| Beep | Stutter | Bell | Yelp |
|---|---|---|---|
| Rapid Hi-Lo | Melody Chime | Synthesized Piano | Synthesized Bell |
| Stutter & Bell | Synthesized Melody | Chime | Call Sign |
| Can't take my eyes off of You | Top of the World | The Entertainer | Amazing Grace |
| Maiden with the flaxen hair | Aux Champs-Elysees | Canon | La-la Sunshine |
| Space Battleship Yamato | Oshiete | Makenai de | Theme Song |
| I Don't Want to Miss a Thing | Yozora no Mukou | Ai wa Katsu | Truth |
| Guts Daze!! | Odoru Ponpokorin | Ima sugu Kiss Me | Haru yo, Koi |

Type D

| Beep | Stutter | Bell | Yelp |
|---|---|---|---|
| Rapid Hi-Lo | Melody Chime | Synthesized Piano | Synthesized Bell |
| Runner | Mamotte Agetai | Chime | Call Sign |
| While listening to Olivia | September | Douyobi no Koibito | Aki no Kihai |
| Surf Tengoku, Ski Tengoku | Iro, White Blend | Happy Birthday | Hi Ho |
| I've been working on the Railroad | The Bear Song | Toys Go Cha-Cha-Cha | Konnako Irukana |
| Shubert's Lullaby | Rudolph the Red-nosed Reindeer | She Wore a Yellow Ribbon | My Darling Clementine |
| Yellow Rose of Texas | Yankee Doodle | When the Saints Go Marching In | Londonderry Aire |

Type E

| Beep | Stutter | Bell | Yelp |
|---|---|---|---|
| Rapid Hi-Lo | Melody Chime | Synthesized Piano | Synthesized Bell |
| Stutter & Bell | Synthesized Melody | Chime | Call Sign |
| Bee-boh sound | Galloping Hi-Lo | Alien Chatter | Falling Crystals |
| Inverted Reveille x3 | Galactic Motor | Ringing Phone | Two Tone |
| Alarm Clock | Ringing Hi-Lo | Fur Elise | Minuet in Gmjr |
| Annie Laurie | London bridge is falling down | Mary had a little Lamb | Camptown Races |
| Amaryllis | Mozart Symphony No.40 | Ave Maria | Grandfather's Clock |

●Bit input → plays 8 sounds (see instruction manual for 8 sound grouping) Binary input → plays 32 sounds
●Alarm tones are denoted in characters for convenience' sake. Please inquire about actual tones or check our website for more details.

### Use of Copyrighted Material

PATLITE Corporation has not applied for permission to use certain copyrighted music or songs recorded for Type-A, Type-C and Type-D melody charts outside of Japan. Therefore, please contact the local copyright association for permission before using the product in case this product is used outside of Japan. Melody chart Type-E is recommended for use outside of Japan as this playlist does not include copyrighted music or songs, and permission is not required.

## Specifications

| | Model | Rated Voltage | Operating Voltage Range | Power Consumption | Bulb | Number | Number of flashes | Sound Pressure Level | External Contact Capacity | Operating Temperature Range | Contact Input Method | Playback Channel | Protection Rating | Mass |
|---|---|---|---|---|---|---|---|---|---|---|---|---|---|---|
| Electronic sound 1 tier | **KJT-102□** | 24V DC | 21 - 27V DC | 21W | 24V 10W | 10 | 120±30 /minute | Maximum 90dB (at 1m) | 10mA or more | -20℃ - +45℃ (humidity 85% or less) | Normally closed contact input (1 bit per 9 points) | Bit input 8 Binary input 32 | IP23 | 1.3kg |
| | **KJT-110□** | 100V AC | 90 - 110V AC | 20W | 12V 5W | 12 | 120±20 /minute | Maximum 85dB (at 1m) | | | | | | 1.7kg |
| | **KJT-120□** | 200V AC | 180 - 240V AC | | | | | | | | | | | |
| Electronic sound 2 tier | **KJT-202□** | 24V DC | 21 - 27V DC | 31W | 24V 10W | 10 | 120±30 /minute | Maximum 90dB (at 1m) | | | Normally closed contact input (1 bit per 10 points) | | | 1.9kg |
| | **KJT-210□** | 100V AC | 90 - 110V AC | 26W | 12V 5W | 12 | 120±20 /minute | Maximum 85dB (at 1m) | | | | | | 2.4kg |
| | **KJT-220□** | 200V AC | 180 - 240V AC | | | | | | | | | | | |
| Electronic sound 3 tier | **KJT-302□** | 24V DC | 21 - 27V DC | 41W | 24V 10W | 10 | 120±30 /minute | Maximum 90dB (at 1m) | | | Normally closed contact input (1 bit per 11 points) | | | 2.5kg |
| | **KJT-310□** | 100V AC | 90 - 110V AC | 32W | 12V 5W | 12 | 120±20 /minute | Maximum 85dB (at 1m) | | | | | | 3.0kg |
| | **KJT-320□** | 200V AC | 180 - 240V AC | | | | | | | | | | | |

Bulb Shape・・・glass bulb G18 base BA15S
(Note) The indicated sound pressure level is at maximum volume and the actual level may be lower than the indicated sound pressure level due to tone and voltage fluctuations.
*When using multiple units, there may be variation in the playback sound even when started simultaneously with the tone.

## Model Code

**KJT-302A-RYG**

Model
| | |
|---|---|
| KJT | Electronic sound |

Number of tiers

Rated Voltage
| | |
|---|---|
| 02 | 24V DC |
| 10 | 100V AC |
| 20 | 200V AC |

Tone specifications
| | |
|---|---|
| A | Type A |
| C | Type C |
| D | Type D |
| E | Type E |

Colors (From Top to Bottom)
| | |
|---|---|
| R | Red |
| Y | Amber |
| G | Green |
| B | Blue |

## Optional Parts

For details, see pages 182 to 187.

| Optional Parts | Model |
|---|---|
| Wallmount Bracket | SZ-023 |
| Wallmount Bracket | SZ-008 |

| Light bulb No. | Model |
|---|---|
| 10 | D02401003A-F1 |
| 12 | D01200503A-F1 |

*Light bulbs come in packs of 10.
*Stock for some light bulbs may be limited, as products become discontinued. We ask for your understanding in this regard.

## Dimensions (mm)

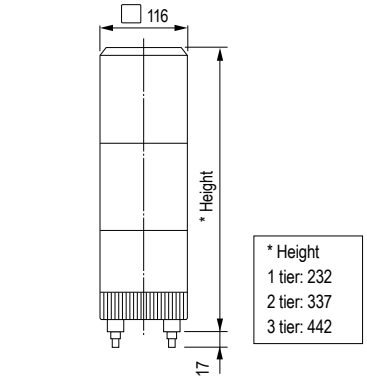


* Height
1 tier: 232
2 tier: 337
3 tier: 442

Installation Dimension Drawings

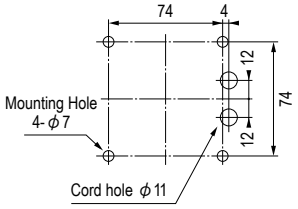


## Wiring Diagram

KJT type

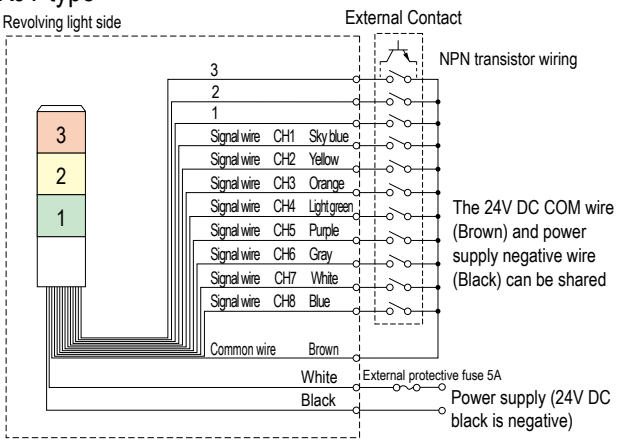


■Order of priority

CH8 (Blue) > CH7 (White) > CH6 (Gray) > CH5 (Purple) > CH4 (Light green) > CH3 (Pink) > CH2 (Yellow) > CH1 (Sky blue)

*If multiple signals are input simultaneously, it will prioritize the channel with the highest number.

| Power supply voltage | KJT-A/C/D/E |
|---|---|
| 24V DC | Revolving light, sound signal wire<br>When circuit is open: 24V<br>When circuit is closed: 6mA |

| | Nominal Cross-sectional Area | : | Wire Type | : | Wire Length |
|---|---|---|---|---|---|
| Power Supply Wire | 0.75mm² | : | VCT | : | 330mm |
| Signal Wire | 0.3mm² | : | UL1007 | : | 340mm |

Revolving light signal wire classification table

| Type | Wire Color | | |
|---|---|---|---|
| | 1 | 2 | 3 |
| 1-Tier model | Red R | — | — |
| 2-Tier model | Orange O | Red R | — |
| 3-Tier model | Green G | Orange O | Red R |

# RFT

| | |
|---|---|
| Colors | Red, Amber, Green, Blue |
| Globe | Polycarbonate resin with superb shock and heat resistance |

The RFT Series features a 100mm diameter rotating LED light, pre-loaded audible alarm sounds, with a 90dB horn for highly effective signaling.

- Efficient, maintenance-free LEDs
- Gear-method system for controlling light source and motor significantly increases product life
- High weather resistance for outdoor use
- Up to 90dB sound output at 1m
- 32 pre-loaded tone and alarm sounds
- IP54 protection rating
- Easily accessible volume control
- NPN compatible

Sound pressure 90dB | IP54 | RoHS | CE (only 24V) | 100φ

## Table of tones

32 Built-in Tones.

Every unit has 32 tones built-in.
Four built-in variations include RFT-A, RFT-C, RFT-D and RFT-E.

Type A

| Beep | Stutter | Bell | Yelp |
|---|---|---|---|
| Rapid Hi-Lo | Melody Chime | Synthesized Piano | Synthesized Bell |
| Stutter & Bell | Synthesized Melody | Chime | Call Sign |
| Fur Elise | A Maiden's Prayer | Minuet in Gmjr | Annie Laurie |
| London bridge is falling down | Holdiridia | Mary had a little Lamb | Camptown Races |
| Cuckoo Song | Village Blacksmith | On the Avignon Bridge | Daydream Believer |
| Amaryllis | Mozart Symphony No.40 | Quiet Lakeside | Mountain Musician |
| Spanish Romance | Katyusha | Grandfather's Clock | Ave Maria |

Type C

| Beep | Stutter | Bell | Yelp |
|---|---|---|---|
| Rapid Hi-Lo | Melody Chime | Synthesized Piano | Synthesized Bell |
| Stutter & Bell | Synthesized Melody | Chime | Call Sign |
| Can't take my eyes off of You | Top of the World | The Entertainer | Amazing Grace |
| Maiden with the flaxen hair | Aux Champs-Elysees | Canon | La-la Sunshine |
| Space Battleship Yamato | Oshiete | Makenai de | Theme Song |
| I Don't Want to Miss a Thing | Yozora no Mukou | Ai wa Katsu | Truth |
| Guts Daze!! | Odoru Ponpokorin | Ima sugu Kiss Me | Haru yo, Koi |

Type D

| Beep | Stutter | Bell | Yelp |
|---|---|---|---|
| Rapid Hi-Lo | Melody Chime | Synthesized Piano | Synthesized Bell |
| Runner | Mamotte Agetai | Chime | Call Sign |
| While listening to Olivia | September | Douyobi no Koibito | Aki no Kihai |
| Surf Tengoku, Ski Tengoku | Iro, White Blend | Happy Birthday | Hi Ho |
| I've been working on the Railroad | The Bear Song | Toys Go Cha-Cha-Cha | Konnako Irukana |
| Shubert's Lullaby | Rudolph the Red-nosed Reindeer | She Wore a Yellow Ribbon | My Darling Clementine |
| Yellow Rose of Texas | Yankee Doodle | When the Saints Go Marching In | Londonderry Aire |

Type E

| Beep | Stutter | Bell | Yelp |
|---|---|---|---|
| Rapid Hi-Lo | Melody Chime | Synthesized Piano | Synthesized Bell |
| Stutter & Bell | Synthesized Melody | Chime | Call Sign |
| Bee-boh sound | Galloping Hi-Lo | Alien Chatter | Falling Crystals |
| Inverted Reveille x3 | Galactic Motor | Ringing Phone | Two Tone |
| Alarm Clock | Ringing Hi-Lo | Fur Elise | Minuet in Gmjr |
| Annie Laurie | London bridge is falling down | Mary had a little Lamb | Camptown Races |
| Amaryllis | Mozart Symphony No.40 | Ave Maria | Grandfather's Clock |

Use of Copyrighted Material

PATLITE Corporation has not applied for permission to use certain copyrighted music or songs recorded for Type-A, Type-C and Type-D melody charts outside of Japan. Therefore, please contact the local copyright association for permission before using the product in case this product is used outside of Japan. Melody chart Type-E is recommended for use outside of Japan as this playlist does not include copyrighted music or songs, and permission is not required.

- Bit input →8 sound playback (See instruction manual for 8 sound grouping) Binary input →32 sound playback
- Alarm tones are denoted in characters for convenience. Please inquire about actual tones or check our website for more details.

## Specifications

| Model | Rated Voltage | Operating Voltage Range | Maximum power consumption | Sound Pressure Level | Channel input (number of playback tones) | Operating Temperature Range | Number of flashes | Mass |
|---|---|---|---|---|---|---|---|---|
| **RFT-24** | 24V DC | 24V DC ±10% | 12W | Maximum 90dB (at 1m) | Bit input (8CH) Binary input (32CH) | -10 °C to +50 °C (humidity 85% or less) | 115±15 /minute | 1.0kg±10% |
| **RFT-100A-R** | 100V AC | 100V AC±10% | 13W | | | | | 1.2kg±10% |
| **RFT-220** | 220V AC | 220V AC±10% | 13W | | | | | 1.2kg±10% |

(Note) The sound pressure level changes based on tone, use environment, and working voltage. *When using multiple units, there may be variation in the playback sound even when started simultaneously.

## Model Code

**RFT-100A-R**

Rated Voltage

| | |
|---|---|
| 24 | 24V DC |
| 100 | 100V AC |
| 220 | 220V AC |

Tone specifications

| | |
|---|---|
| A | Type A |
| C | Type C |
| D | Type D |
| E | Type E |

Revolving light colors

| | |
|---|---|
| R | Red |
| Y | Amber |
| G | Green |
| B | Blue |

## Optional Parts

For details, see pages 182 to 187.

| Optional Parts | Model |
|---|---|
| Wallmount Bracket | RF-001 |
| Overhead mounting bracket | RF-002 |
| SD card (2GB) | SDV-2GP |

## Dimensions (mm)

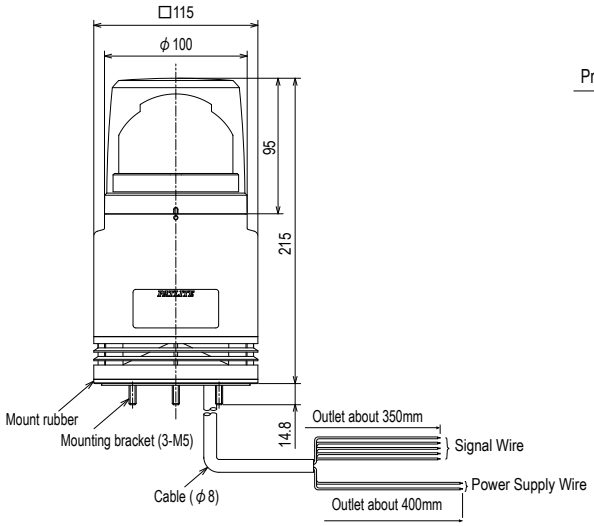


### Installation Dimension Drawings

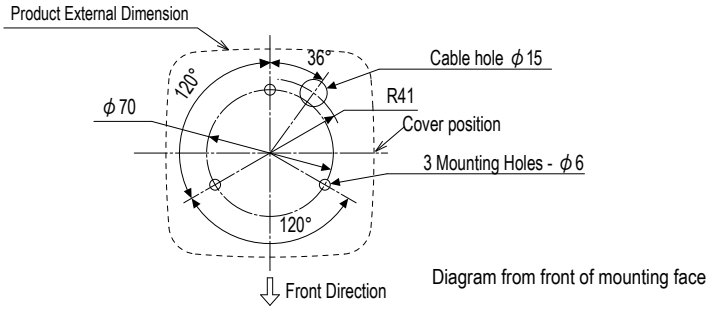


Diagram from front of mounting face

## Wiring Diagram

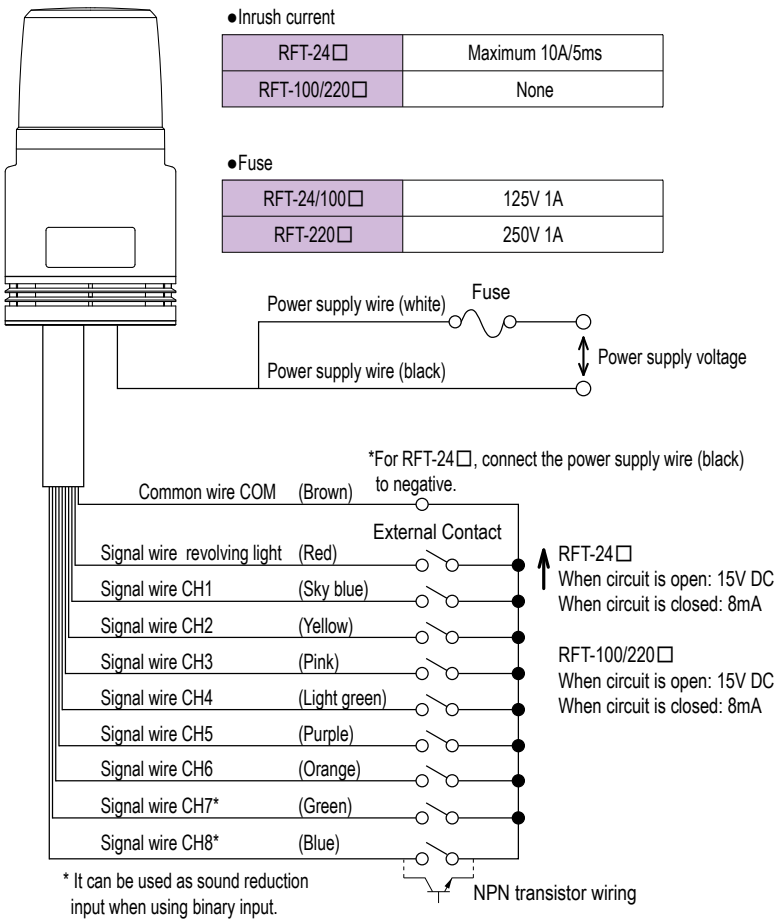


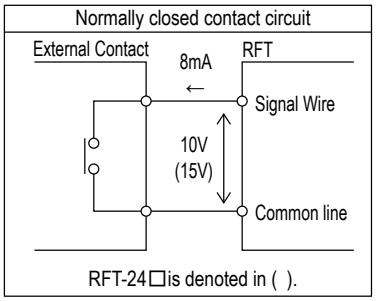


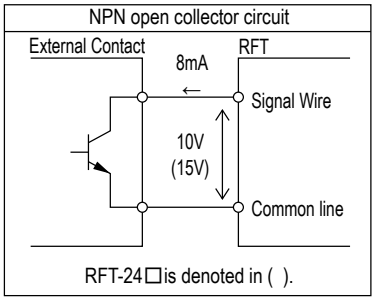


| Contact Capacity | |
|---|---|
| Current Capacity | 10mA or more |
| Withstand Voltage | 20V DC or more |
| Leakage Current | 0.1mA or less |
| ON voltage (Vsat) | 1V or less |

●The revolving light operates simultaneously when a tone is played back.

Nominal cross-sectional area : Wire type
RFT-24: power supply wire : AWG18 : UL1061
Signal wire : AWG22 : UL1061
RFT-100/220: power supply wire : 0.75mm$^2$ : VSF
Signal wire : AWG22 : UL1061

# RFV

| | |
|---|---|
| Colors | Red, Amber, Green, Blue |
| Globe | Polycarbonate resin with superb shock and heat resistance |

The RFV Series features a 100mm diameter rotating LED light, pre-loaded audible alarm sounds, with a 90dB horn for highly effective signaling.

- Efficient, maintenance-free LEDs
- Gear-method system for controlling light source and motor significantly increases product life
- Message capacity up to 63 seconds with 4 channel bit input or 15 channel binary input
- High weather resistance for outdoor use
- Up to 90dB sound output at 1m
- Vibration resistant up to 4.5G
- IP54 protection rating
- Easily accessible volume control
- NPN compatible

Sound pressure 95dB | IP54 | RoHS | CE (only 24V) | 100φ

## Specifications

| Model | Rated Voltage | Operating Voltage Range | Power Consumption | Number of flashes | Sound Pressure Level | Audio File | Operating temperature range | Maximum Number of Playback Seconds | Number of messages | Protection Rating | Mass | Colors |
|---|---|---|---|---|---|---|---|---|---|---|---|---|
| **RFV-24F** | 24V DC | 24V DC ±10% | Maximum 18W | 115±15 time/min | Maximum 95dB (at 1m) | MPEG1-Audio Layer 3 (MP3) Standard bitrate: 64kbit/s, Fs=44.1kHz | -10 °C to +50 °C (humidity 85% or less) | 63 s | 4 (bit input) 15 (binary input) | IP54 (Mounted in the upright direction) | 1.0kg±10% | R, Y |
| | | | | | | | | | | | | G, B |
| **RFV-100F** | 100V AC | 100V AC±10% | Maximum 16W | | | | | | | | 1.2kg±10% | R, Y |
| | | | | | | | | | | | | G, B |
| **RFV-220F** | 220V AC | 220V AC±10% | | | | | | | | | | R, Y |
| | | | | | | | | | | | | G, B |

(Note) The indicated sound pressure level is the maximum volume (synthetic sound type: sine wave (1KHz)) and the actual level may be lower than the indicated sound pressure level due to message content, tone, and voltage fluctuations.
*When using multiple units, there may be variation in the playback sound even when started simultaneously with the tone and voice.

## Model Code

**RFV-100F-R**

Rated Voltage

| | |
|---|---|
| 24 | 24V DC |
| 100 | 100V AC |
| 220 | 220V AC |

Revolving light colors

| | |
|---|---|
| R | Red |
| Y | Amber |
| G | Green |
| B | Blue |

## Optional Parts

For details, see pages 182 to 187.

| Optional Parts | Model |
|---|---|
| Wallmount Bracket | RF-001 |
| Overhead mounting bracket | RF-002 |
| SD card (2GB) | SDV-2GP |

## Dimensions (mm)

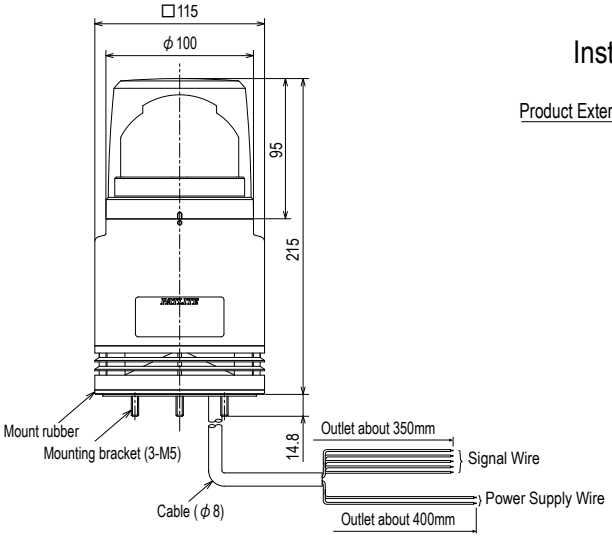


### Installation Dimension Drawings

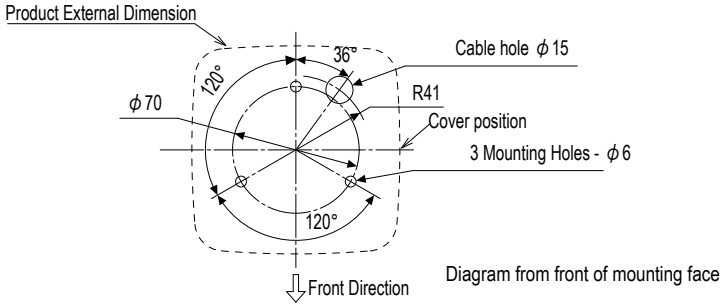

## Wiring Diagram

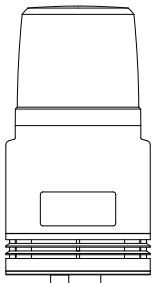

●Inrush current

| | |
|---|---|
| RFV-24F | Maximum 10A/5ms |
| RFV-100/220F | None |

●Fuse

| | |
|---|---|
| RFV-24/100F | 125V 1A |
| RFV-220F | 250V 1A |

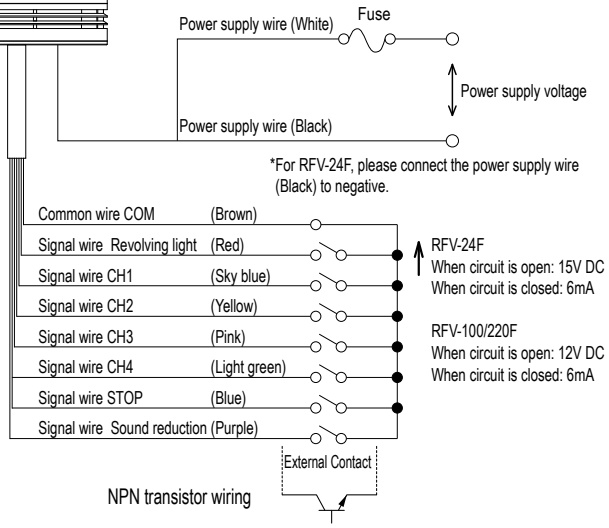


●The revolving light operates simultaneously when a message is played back.
(Note) Input requires at least 100msec.

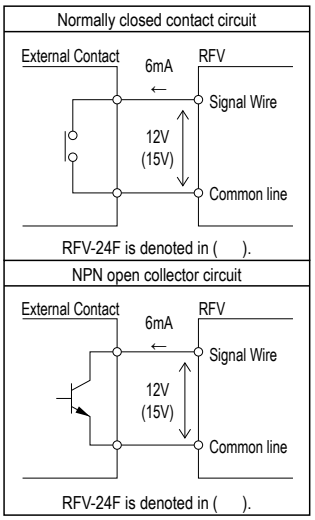


| Contact Capacity | |
|---|---|
| Current Capacity | 10mA or more |
| Withstand Voltage | 20V DC or more |
| Leakage Current | 0.1mA or less |
| ON voltage (Vsat) | 1V or less |

Nominal cross sectional area : Wire type
RFV-24F : Power supply wire : AWG18 : UL1061
Signal wire : AWG22 : UL1061
RFV-100F/220F : power supply wire : 0.75mm$^2$: VSF
Signal wire : AWG22 : UL1007

# LED Work Lights

| Page number | Page 172 | Page 173 | Page 175 |
|---|---|---|---|
| Model Name | LED Work Light | | LED Work Light |
| Model | **CWF** | **CLA** | **CWA** |
| Product image | | | |
| Rated Voltage | 100-240V AC | 24V DC | 24V DC |
| Size | 300/600/900 | 100/200/300/600/900/1200 | 300/600/900 |
| IP | 20 | 66/67/69K | 65 |
| Body | Alminum | Polycarbonate | Polycarbonate |
| Cover | Polycarbonate | Polycarbonate | Polycarbonate |
| Color temperature | 5700K(-CD) | 6800K(-CD) | 6500K(-CD) |
| Mounting | | | |
| CE | ○ | ○ | ○ |
| RoHS | ○ | ○ | ○ |
| UL | ○ | ○ | ○ |

| Page number | Page 177 | Page 179 | Page 181 |
|---|---|---|---|
| Model Name | LED Work Light | | LED Work Light |
| Model | **CLK** | **CWK** | **CLN** |
| Product image | | | |
| Rated Voltage | 24V DC | 24V DC | 24V DC |
| Size | 200/300/600 | 200/300/600 | □85 |
| IP | 66G/67G/69K | 66G/67G | 66G/67G/69K |
| Body | Alminum/Stainless steel | Alminum | Alminum |
| Cover | Tempered Glass | Tempered glass | Tempered glass |
| Color temperature | 6500K(-CD),5000K(-CN) | 6500K(-CD) | 6500K |
| Mounting | | | |
| CE | ○ | ○ | ○ |
| RoHS | ○ | ○ | ○ |
| UL | ○* | ○ | ○ |

*AG (aluminum) specifications only

## Shows Shadows and Light

Virtual midday sunlight color remarkably distinguishes shadows and edges.
It's suitable for use with detailed lighting or lighting
up displays.

## Yellow Ring Reduction (CLK)

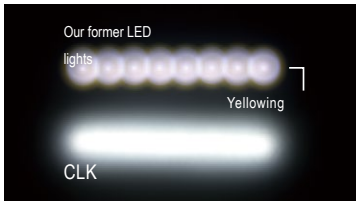


The new PATLITE "micro-array lens" is designed to
even-out light refraction, reduce unevenness and "Yellow Ring", a bad influence on lighting.

○Microarray lens

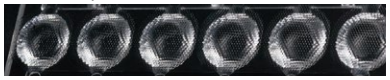

## Daylight

The daylight color is the color temperature close to the sunlight at noon, and it is suitable for identifying shapes, precision work and inspection for research applications. (Approximately equivalent to a D65 light source)

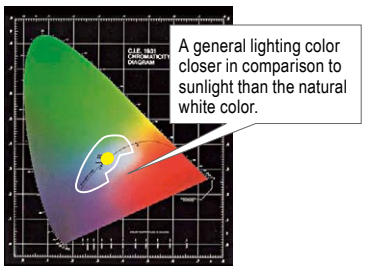


☐ White spectrum inside the white line
The natural white general spectrum

- ●IP6X= The product is placed in a dust chamber with a negative pressure state so
- ●IPX6= that dust is made to float for 8 hours, and there is no invasion inside.
- ●IPX7= A water nozzle with a diameter of 12.0mm is placed at a range from 2.5 to
- ●IPXXG= 3.0 meters with a water velocity of 100 litres per minute injected towards the
- ●IPX9K= test piece in an omni-direction for three minutes or more without being affected by any harmful influences.

The outline of the product is submerged at a distance of 1m from the bottom of a tank, and it is held submerged for 30 minutes.
A non-water soluble N3 class No. 8 as specified in JIS K2241 (for coolants) is dropped on top of the upper part of a product at a rate of 0.5L/h for 48 hours.
IPX9K is the German DIN 40050 PART9 standard. It is defined as a protection regulation for high temperature and high-pressurized water.
Water is heated up to 80  and sprayed at a water pressure in the range from 80 to 100 BARs at 14 to 16 liters per minute at the test object.
The test object is at a distance of 100 to 150 mm from the nozzle and sprayed in all directions at 0, 30, 60, and 90 degrees, then sprayed at a horizontal angle while it is being rotated, all done for a period of 30 seconds without being affected by water penetration.

## Tough aluminum materials and stainless steel body

### Aluminum specifications (CLK-AG)

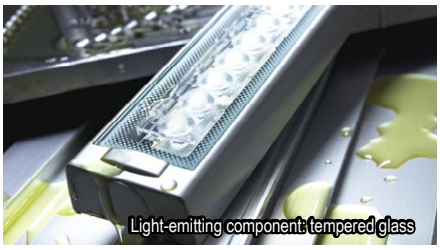


### Stainless steel specifications (CLK-SG)

- ●Compliant with 3 different protection ratings; IP66 and 67G (JIS C0920:2003) and IP 69K (DIN 40050 part 9) in waterproof performance for the demand which needs 80  underpressure hot water washing in the field for meat / food processing, medicine manufacturing and beverage industries.
- ●Product lineup of four types with three different sizes (200-600 mm), 2 colors (Daylight, Natural White), Main Unit selection of material, and the type of cable connection. It can adapt to various scenes.
- ●The operating temperature limit of -40 to +60  allows the possibility for installation in a sub-freezing temperature environment, such as a cold storage warehouse.
- ●Corresponds to Europe's RoHS Directive.
- ●CE Marking Compliant
- ●UL Listed (File No.E306141) for Cable and aluminium body
- ●UL Recognized Component (File No.E306141) for M12 connector / M12 link and aluminium body

*Water-proof and oil resistance varies according to the model.

# CWF

※M2C type only ※M2U type only

## User-Friendly Operation

### Rocker Switch

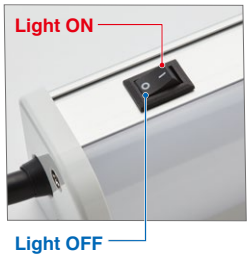


### Simple Installation

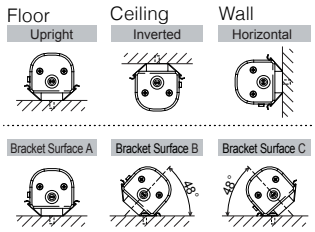


## Illuminance Distribution Chart (lx)

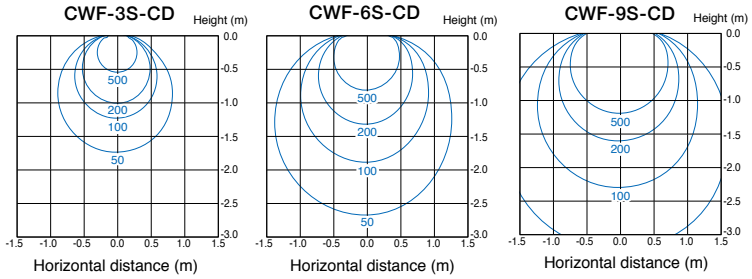


## Specifications

| Model | CWF3S-24 | CWF6S-24 | CWF3S-M2□ | CWF6S-M2□ | CWF9S-M2□ |
|---|---|---|---|---|---|
| Color Temperature (typ.) | 5700K | | | | |
| Illuminance (typ.) (Center) 1.0m | 165 lx | 320 lx | 150 lx | 320 lx | 445 lx |
| Total Luminous Flux (typ.) | 500 lm | 1000 lm | 500 lm | 1000 lm | 1500 lm |
| Rated Voltage | 24V DC | | 100-240V AC (50/60Hz) | | |
| Operating Voltage Range | 21.6-26.4V DC | | 90-264V AC | | |
| Rated Power Consumption | 5W | 10W | 5W | 10W | 15W |
| Operating Ambient Temperature | -25 °C ~ +60°C | | -20 °C ~ +50°C | | |
| Operating Ambient Humidity | 90% RH or less, no condensation | | | | |
| Mounting Location | Indoor | | | | |
| Mounting Direction | All Directions | | | | |
| Protection Rating | IP20 | | | | |
| Mass (Tolerance ±10%) | 0.42kg | 0.57kg | M2U:0.53kg M2C:0.46kg | M2U:0.68kg M2C:0.6kg | M2U:0.84kg M2C:0.76kg |

## Model Code

**CWF-□-□-CD**

Full Length

| | |
|---|---|
| 3S | 300mm |
| 6S | 600mm |
| 9S | 900mm |

Luminous Color

| | |
|---|---|
| CD | Daylight |

Rated Voltage / Standards

| | |
|---|---|
| 24 | 24V DC / UL LISTED,CE※1 |
| M2U | 100-240V AC / UL LISTED |
| M2C | 100-240V AC / CE,KC |

※1 CWF 3S 6S type only

## Dimensions (mm)

Unit : mm

### LED Work Light

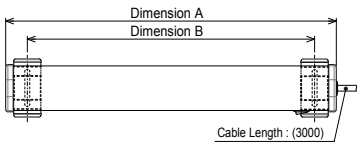


CWF-001

| Model | Dimension A Body Length | Dimension B Bracket Pitch |
|---|---|---|
| CWF3S-□-CD | 300 | 260 |
| CWF6S-□-CD | 600 | 560 |
| CWF9S-□-CD | 900 | 860 |

### CWF Standard Mounting Bracket (2 pcs)

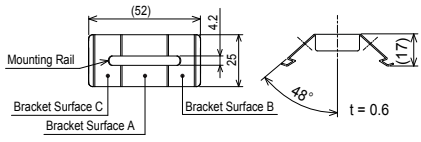


CWF-001

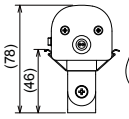


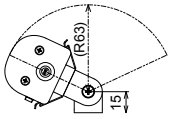


CWF-002

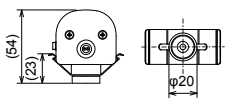


## Optional Parts

**Standard** Mounting Bracket

※Mounting screws not included.
Recommended Torque : 1.5Nm

**Option** Swivel Bracket
CWF-001

**Option** Magnetic Mounting Bracket
CWF-002

※Accessory Bracket Screw 2pcs included

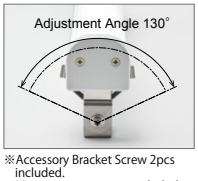


※Accessory Bracket Screw 2pcs included.
Mounting screws not included.

# CLA

CLA-CD (daylight color: 6800K)

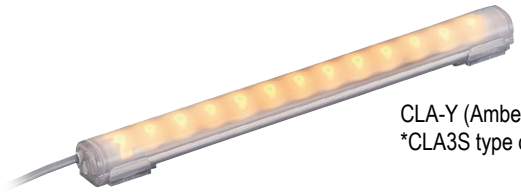

CLA-Y (Amber)
*CLA3S type only

The CLA Series is built for use in high-pressure, high-temperature cleaning and sub-zero environments. The rugged polycarbonate construction means there is no glass or other contamination to be concerned about. Its various lengths allow it to be used in small and large areas and the daylight color temperature enables objects to be seen clearly.

- First in industry (based on self investigation) IP66, IP67 and IP69K rated LED work light
- Ideal for use in wet or high-pressure, high-temperature applications in food processing, beverage, and pharmaceutical industries.
- 34% less heat generated compared to 20W fluorescent lights, thus keeping the work environment cooler.
- Ultra-bright, maintenance-free LEDs

IP66 IP67 IP69K RoHS UL CE

- IP6X= The product is placed in a dust chamber with a negative pressure state so that dust is made to float for 8 hours, and there is no invasion inside.
- IPX6= A water nozzle with a diameter of 12.0mm is placed at a range from 2.5 to 3.0 meters with a water velocity of 100 litres per minute injected towards the test
- IPX7= piece in an omni-direction for three minutes or more without being affected by any harmful influences.
- IPX9K= The outline of the product is submerged at a distance of 1m from the bottom of a tank, and it is held submerged for 30 minutes.
  A non-water soluble N3 class No. 8 as specified in JIS K2241 (for coolants) is dropped on top of the upper part of a product at a rate of 0.5L/h for 48 hours.
  IPX9K is the German DIN 40050 PART9 standard. It is defined as a protection regulation for high temperature and high-pressurized water.
  Water is heated up to 80 and sprayed at a water pressure in the range from 80 to 100 BARs at 14 to 16 liters per minute at the test object.
  The test object is at a distance of 100 to 150 mm from the nozzle and sprayed in all directions at 0, 30, 60, and 90 degrees, then sprayed at a horizontal angle while it is being rotated, all done for a period of 30 seconds without being affected by water penetration.

Passed dust-proof and water resistance tests listed below:

## Specifications

| Model | Light source color | Rated Voltage | Operating Voltage Range | Rated Current Consumption | Central Illuminance (lx/50cm) | Body Materials | Operating Temperature Range | Mounting direction (Mounting specification) | Protection Rating | Vibration Resistance | Mass | Cable length |
|---|---|---|---|---|---|---|---|---|---|---|---|---|
| **CLA1S-24-CD** | Daylight color | 24V DC (has polarity) | 24V DC±10% | 104mA | 140 | Cover: Polycarbonate | -40℃ - +60℃ (90%RH or less, no condensation) | All Directions (indoor use) | IP66/ 67/69K | 19.6m/s² | 80 g | 0.5m |
| **CLA1S-24-CD-30** | Daylight color | | | | | | | | | | | 3.0m |
| **CLA2S-24-CD** | Daylight color | | | 208mA | 270 | | | | | | 130 g | 0.5m |
| **CLA2S-24-CD-30** | Daylight color | | | | | | | | | | | 3.0m |
| **CLA3S-24-CD** | Daylight color | | | 240mA | 400 | | | | | | 180 g | 0.5m |
| **CLA3S-24-CD-30** | Daylight color | | | | | | | | | | | 3.0m |
| **CLA3S-24-Y** | Amber | | | | 220 | | | | | | | 0.5m |
| **CLA6S-24-CD** | Daylight color | | | 480mA | 650 | | | | | | 340 g | 0.5m |
| **CLA6S-24-CD-30** | Daylight color | | | | | | | | | | | 3.0m |
| **CLA9S-24-CD** | Daylight color | | | 720mA | 810 | | | | | | 500 g | 0.5m |
| **CLA9S-24-CD-30** | Daylight color | | | | | | | | | | | 3.0m |
| **CLA12S-24-CD** | Daylight color | | | 960mA | 890 | | | | | | 660 g | 0.5m |
| **CLA12S-24-CD-30** | Daylight color | | | | | | | | | | | 3.0m |

## Model Code

**CLA1S-24-CD-30**

Light-emitting component dimension

| | |
|---|---|
| 1 | 100mm |
| 2 | 200mm |
| 3 | 300mm |
| 6 | 600mm |
| 9 | 900mm |
| 12 | 1200mm |

Light source color

| | |
|---|---|
| CD | Daylight color |
| Y | Amber |

*-Y is a 300mm type only

Cable length

| | |
|---|---|
| Blank | 0.5m |
| 30 | 3.0m |

## Optional Parts

For details, see pages 182 to 187.

| Optional Parts | Model |
|---|---|
| Back mount (fastening screw) | SZ-310AR |
| Back mount (magnet specifications) | SZ-310ARM |
| Side mount (fastening screw) | SZ-310AS |
| Side mount 2 (fastening screw) | SZ-310ASB (dedicated compatibility with CLB-24N ) |

*Please exercise caution to prevent dropping magnet specifications (SZ-310ARM). Please use fastening screw specifications during normal installation.

[Recommended products]
Recommended power supply for CLA series: Omron Corporation
■Universal type...S8JX type (open type/type with cover) 24V 0.65A/1.5A/2.1A/4.5A/6.5A
■UL Class 2 type...S8VS type 24V 0.65A/1.3A/2.5A/3.75A/5A/7.5A/10A/20A
http://www.fa.omron.co.jp

## Dimensions (mm)

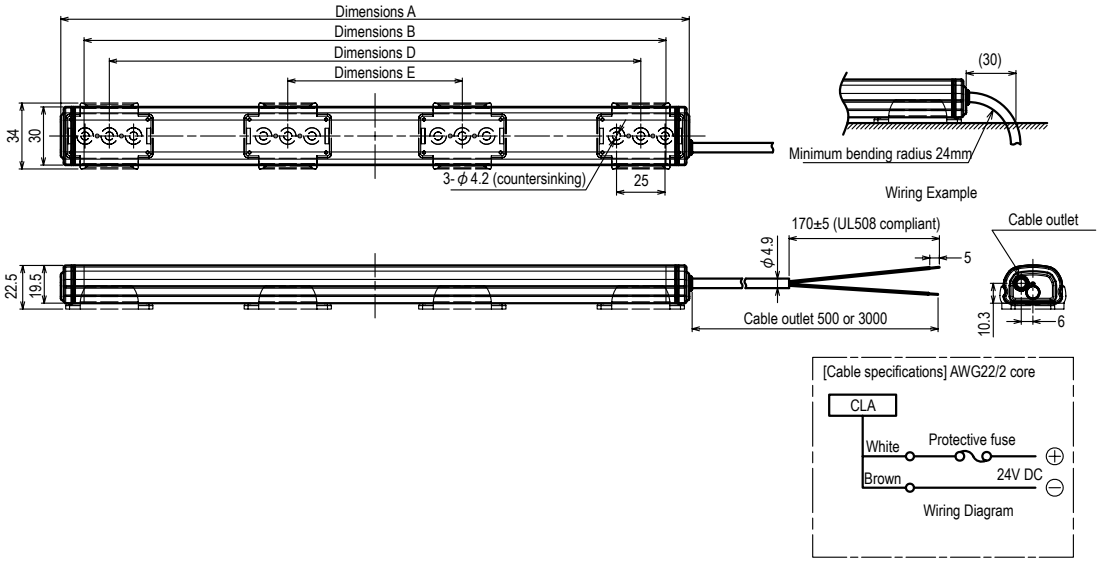


| Model Name | Dimensions A | Dimensions B | Dimensions D | Dimensions E | Bracket (SZ-310AR) Number included |
|---|---|---|---|---|---|
| | Full-length part | Light-emitting component | Recommended mounting pitch | | |
| **CLA1S-** | 124 | 100 | 74 | — | 2 |
| **CLA2S-** | 224 | 200 | 174 | — | 2 |
| **CLA3S-** | 324 | 300 | 274 | — | 2 |
| **CLA6S-** | 624 | 600 | 574 | — | 2 |
| **CLA9S-** | 924 | 900 | 874 | 290 | 4 |
| **CLA12S-** | 1224 | 1200 | 1174 | 390 | 4 |

# CWA

IP65 RoHS UL CE

The CWA Series slim LED light bar is an affordable replacement for conventional fluorescent lamps. It outperforms them in several ways and has an IP65 rating which allows installation in most common environments. Bright, long-lasting LEDs (40,000 hrs. to 70% of original brightness) greatly reduce maintenance costs.

- 24V DC rated voltage
- -30℃ to +60℃ operating temperature range
- 6500K LED color temperature - Daylight white

## Model Code

**CWA □S - 24 - CD**

Model

Light Bar Length

| | |
|---|---|
| 3 | 300mm |
| 6 | 600mm |
| 9 | 900mm |

Color

| | |
|---|---|
| CD | Daylight |

Rated Voltage

| | |
|---|---|
| 24 | 24V DC |

Connector Specifications

| | |
|---|---|
| S | Side-exiting Cable |

## Specifications

| Model | CWA3S-24-CD | CWA6S-24-CD | CWA9S-24-CD |
|---|---|---|---|
| Luminous Color | Daylight | | |
| Color Temperature (typ.) | 6500K | | |
| Illuminance (at 24V DC) 1.0m | 440 lx | 800 lx | 990 lx |
| Total Luminous Flux (typ.) | 350 lm | 700 lm | 1050 lm |
| Operating Voltage Range | 24V DC ±10% | | |
| Current Consumption | 180mA | 360mA | 540mA |
| Rated Power Consumption | 6W | 12W | 18W |
| Operating Ambient Temperature | -30°C - +60°C | | |
| Operating Ambient Humidity | 90% RH or less, no condensation | | |
| Main Unit Material | Body: Polycarbonate Resin; Packing: Silicon | | |
| Cable Length | 3 meters | | |
| Mounting Location | Indoors | | |
| Protection Rating | IP65 (Cable ends not included) | | |
| Insulation Resistance | 500V DC 5MΩ or more | | |
| Withstand Voltage | 500V AC for 1 minute (Between terminals and screw) | | |
| Vibration Resistance | 30Hz 19.6m/s$^2$ | | |
| Mass (Tolerance ±10%) | 215g | 385g | 540g |

## Optional Parts

### Mounting Brackets

Material: Stainless Steel

### Holding Brackets

Material: Stainless Steel

## Highly reliable LED chips are used

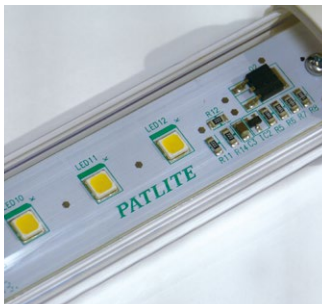


High-definition LED chip

The highly reliable LED chip, which is the core of LED lighting, has nearly 10 times (about 40,000 hours) the lifespan (based on LED brightness of 70%) in comparison to the common fluorescent light, it also does not contain any mercury.

## A uniform light that subdues glare

In comparison to an LED luminous source, we take advantage of the straight beam optical characteristic of the LED without dropping brightness or overdoing it, but reproducing a natural light.

Illumination Distribution Chart

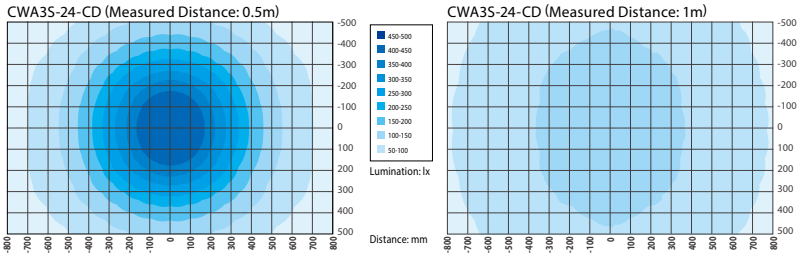


### Cost Saving

Energy ab. 82.7% Less

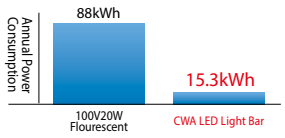


### Earth Friendly

CO2 Emissions ab. 80.7% Less※

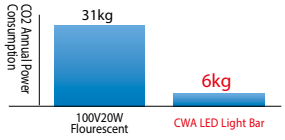


### Long Life

Lifespan 9 times more

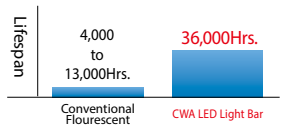


### Low Heat

In Comparison ab. 31% Less

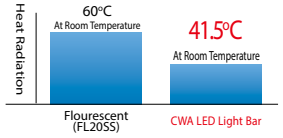


## Dimensions (mm)

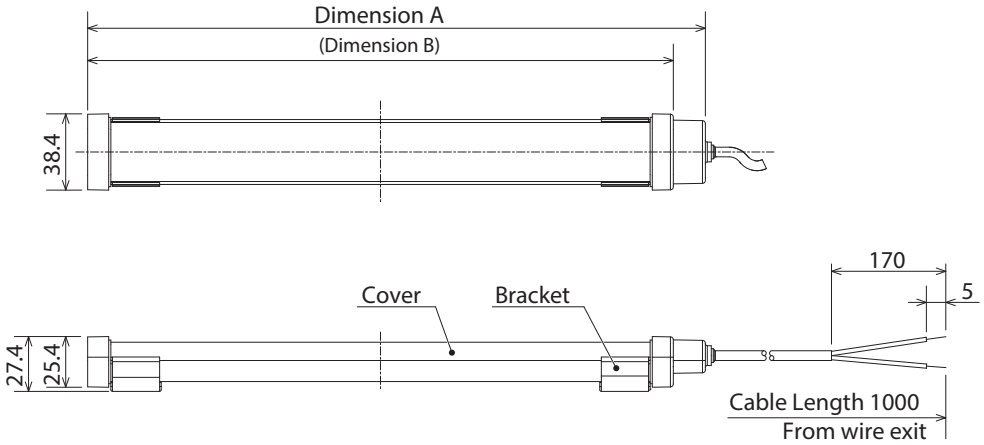


## Wiring Diagram

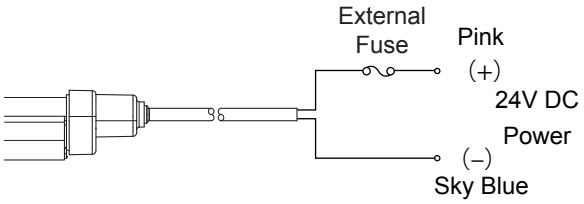


[Enforced]

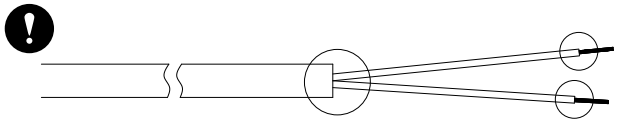

There is no protection rating for the area surrounding the tip of the cable. To ensure insulation of water intrusion, the use of fillers (such as silicon, etc.) to plug up the tip part is recommended.

# CLK

CLK6C-24AG-CD

CLK3C-24SG-CD

CLK3C-24AG-CN

CLK2S-24AG-CD

IP66G IP67G IP69K RoHS UL CE

*UL standards are AG (aluminum) specifications only

The CLK Series was designed especially for the machine tool industry where oil, oil mist, other cutting fluids and debris is constantly present (rated IP66G and IP67G). It has the lowest, space saving profile in the industry but puts out up to 2100 lx, illuminating large areas. The aluminum or stainless steel body and tempered glass protect the unit from hot flying debris. Various lengths are available along with the capability to daisy link them so that the CLK can be used in various equipment sizes.

A stainless steel with acrylic lens unit that is rated IP69K is also available for the food, beverage and pharmaceutical industries where high-pressure and high-temperature wash down is required.

- Cable or M12 connection methods
- 24V DC rated voltage
- -30o to +60oC operating temperature range

- IP6X= The product is placed in a dust chamber with a negative pressure state so
- IPX6= that dust is made to float for 8 hours, and there is no invasion inside.
  A water nozzle with a diameter of 12.0mm is placed at a range from 2.5 to
- IPX7= 3.0 meters with a water velocity of 100 litres per minute injected towards the
- IPXXG= test piece in an omni-direction for three minutes or more without being
- IPX9K= affected by any harmful influences.
  The outline of the product is submerged at a distance of 1m from the bottom
  of a tank, and it is held submerged for 30 minutes.
  A non-water soluble N3 class No. 8 as specified in JIS K2241 (for coolants) is
  dropped on top of the upper part of a product at a rate of 0.5L/h for 48 hours.
  IPX9K is the German DIN 40050 PART9 standard. It is defined as a protection regulation for high temperature and high-pressurized water.
  Water is heated up to 80 and sprayed at a water pressure in the range from
  80 to 100 BARs at 14 to 16 liters per minute at the test object.
  The test object is at a distance of 100 to 150 mm from the nozzle and sprayed in all directions at 0, 30, 60, and 90 degrees, then sprayed at a
  horizontal angle while it is being rotated, all done for a period of 30 seconds
  without being affected by water penetration.

Passed dust-proof, water resistance, and oil-proof tests listed below:.

## Specifications

| Model | Cable length Connection method | Luminous Color | Rated Voltage | Operating Voltage Range | Power Consumption | Size of light-emitting component | Central illuminance (at 1m) | Total luminous flux | Body materials | Light-emitting component with transparent front surface | Operating Temperature Range | Protection Rating | Mass |
|---|---|---|---|---|---|---|---|---|---|---|---|---|---|
| **CLK2S-24AG-CD** | 0.5m Cable takeout | Daylight color | 24V DC | 24V DC±10% | 8.4W | 200mm | 820lx | 865lm | Waterproof and oil-proof type/ Aluminum alloy | Tempered glass | -40℃ ~+60℃ (90%RH or less) | IP66G/ 67G/ 69K | 450g |
| **CLK3S-24AG-CD** | | Daylight color | | | 12.5W | 300mm | 1,200lx | 1,300lm | | | | | 600g |
| **CLK3S-24AG-CN** | | Neutral white | | | | | | | | | | | |
| **CLK6S-24AG-CD** | | Daylight color | | | 25W | 600mm | 2,100lx | 2,600lm | | | | | 1,070g |
| **CLK2C-24AG-CD+FL005** | | Daylight color | | | 8.4W | 200mm | 820lx | 865lm | | | | | 450g |
| **CLK3C-24AG-CD** | M12 connector | Daylight color | | | 12.5W | 300mm | 1,200lx | 1,300lm | | | | | 600g |
| **CLK3C-24AG-CN** | | Neutral white | | | | | | | | | | | |
| **CLK6C-24AG-CD** | | Daylight color | | | 25W | 600mm | 2,100lx | 2,600lm | | | | | 1,070g |
| **CLK3C-24SG-CD** | | Daylight color | | | 12.5W | 300mm | 1,200lx | 1,300lm | Waterproof and highly anti-corrosive/ SUS316 | | | | 1,490g |
| **CLK3C-24SG-CN** | | Neutral white | | | | | | | | | | | |

## Model Code

**CLK2S-24AG-CD**

Light-emitting component dimension

| | |
|---|---|
| 2 | 200mm |
| 3 | 300mm |
| 6 | 600mm |

Wiring

| | |
|---|---|
| S | Cable takeout |
| C | M12 connector connection |

Body materials

| | |
|---|---|
| AG | Body/aluminum<br>Illumination Area: Tempered Glass |
| SG | Body/stainless steel<br>Illumination Area: Tempered Glass |

Luminous Color

| | |
|---|---|
| CD | Daylight color |
| CN | Natural White |

## Optional Parts

For details, see pages 182 to 187.

| Optional Parts | Model |
|---|---|
| Outer mounting bracket | CLK-001 |
| Angle adjustment bracket | SZ-320KS <symmetrical pair> |

## Dimensions (mm)

S-AG/C-AG specifications

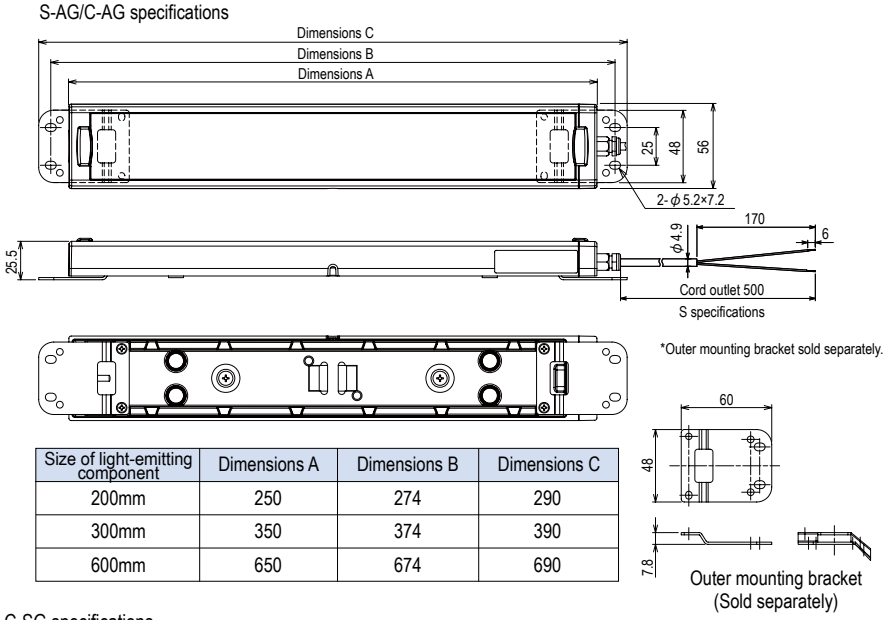


| Size of light-emitting component | Dimensions A | Dimensions B | Dimensions C |
|---|---|---|---|
| 200mm | 250 | 274 | 290 |
| 300mm | 350 | 374 | 390 |
| 600mm | 650 | 674 | 690 |

C-SG specifications

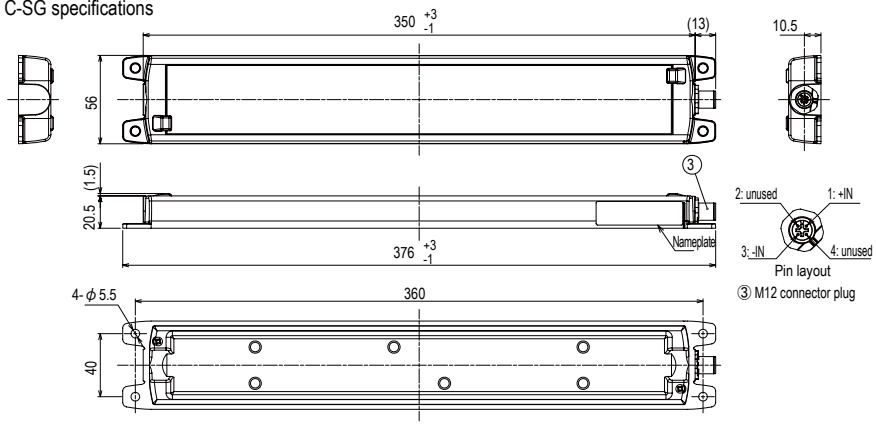


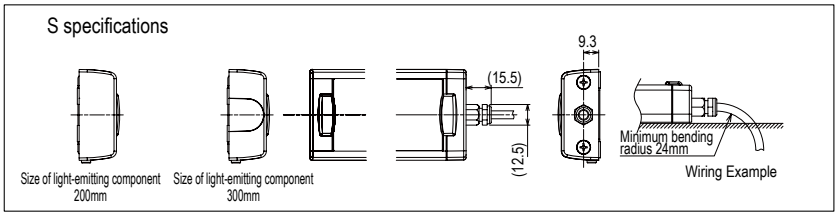


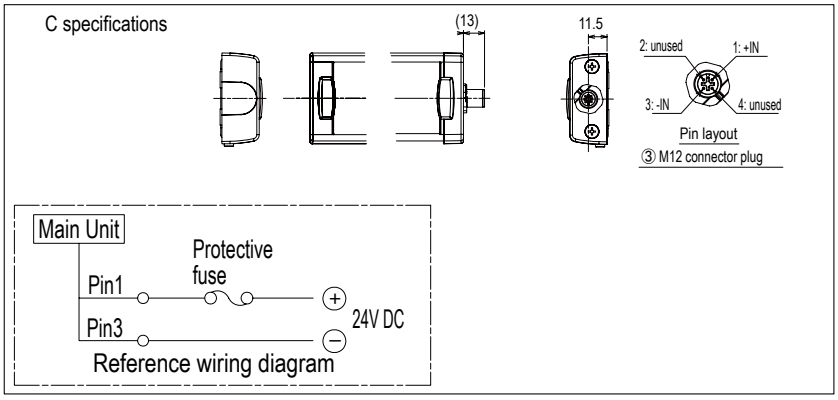


*Caution*

If the cable tip component comes into contact with water or is in a low temperature environment, please waterproof and oil-proof the cable tip component.

## Oil proof test

The product has passed the oil-proof test in the following cutting oils!

Diluted 20 times in the following oils and soaked at 55°C for 240 hours (10 days).

| Name of company |
|---|
| Hangsterfer's |
| Yushiro Chemical Industry Co., Ltd. |
| Castrol |
| Blaser Swisslube |

| Name of oil |
|---|
| Hangsterfer S500 |
| Yushiroken Synthetic #663 |
| Syntilo 9954 |
| Blasocut BC35LFSW |

Confirmation in result of swelling, contraction, dissolution, exfoliation, separation, cracks, and discoloration by the accelerated impregnation examination with the above-mentioned cutting fluid for diluted oil at 55 ℃ for 240 hours (for ten days) was made.

Due to the additive agents in oil, the application of oils other than the ones above may influence physical properties, therefore, please investigate before purchasing.

*The mentioned company names, product names, trademarks, etc. are the registered trademarks or trademarks.

# CWK



IP66G IP67G RoHS UL CE

These brackets are included.

**Mounting Brackets**

The CWK Series was designed especially for the machine tool industry where oil, oil mist, other cutting fluids and debris is constantly present (rated IP66G and IP67G). It has one of the lowest, space saving profiles in the industry but puts out up to 1500 lx, illuminating large areas. In addition to this, a specially designed lens disperses the light so a wider area is illuminated. The aluminum and tempered glass protect the unit from hot flying debris. Various lengths are available along so that the CWK can be used in various equipment sizes.

The body is protected by the tempered glass which disperses the flying debris.

Passed oil resistant test with commonly used cutting oils. [Accelerated aging test with diluted oil at 55°C for 240 hours (10 days) sprayed onto the test object]

## Specifications

| Model | | CWK2S-24 | CWK3S-24 | CWK6S-24 |
|---|---|---|---|---|
| Luminous Color | | Daylight | | |
| Color Temperature (typ.) | | 6500K | | |
| Illuminance (typ.) (at DC24V) | 1.0m | 600 lx | 850 lx | 1500 lx |
| Total Luminous Flux (typ.) | | 800 lm | 1200 lm | 2400 lm |
| Operating Voltage Range | | 24V DC ±10% | | |
| Rated Current Consumption | | 360mA ±10% | 480mA ±10% | 960mA ±10% |
| Rated Power Consumption | | 8.6W | 11.5W | 23.0W |
| Operating Ambient Temperature | | -10 °C - +50 °C | | |
| Operating Ambient Humidity | | 90% RH or less, no condensation | | |
| Main Unit Material | | Body: Aluminum Alloy; Lens: Tempered Glass | | |
| Cable Length | | 3 meters | | |
| Mounting Location | | Indoors | | |
| Protection Rating | | IP66G/ IP67G (JIS C0920) | | |
| Insulation Resistance | | 500V DC 5MΩ or more | | |
| Withstand Voltage | | 500V AC for 1 minute (Between terminals and chassis) | | |
| Vibration Resistance | | 30Hz 20m/s$^2$ | | |
| Mass (Tolerance ±10%) | | 600g | 750g | 1230g |

## Model Code

**CWK□S - 24 - CD**

Light Bar Length

| | |
|---|---|
| 2 | 200mm |
| 3 | 300mm |
| 6 | 600mm |

Connector Specifications

| | |
|---|---|
| S | Side exiting Cable |

Color

| | |
|---|---|
| CD | Daylight |

Rated Voltage

| | |
|---|---|
| 24 | 24V DC |

## Dimensions (mm)

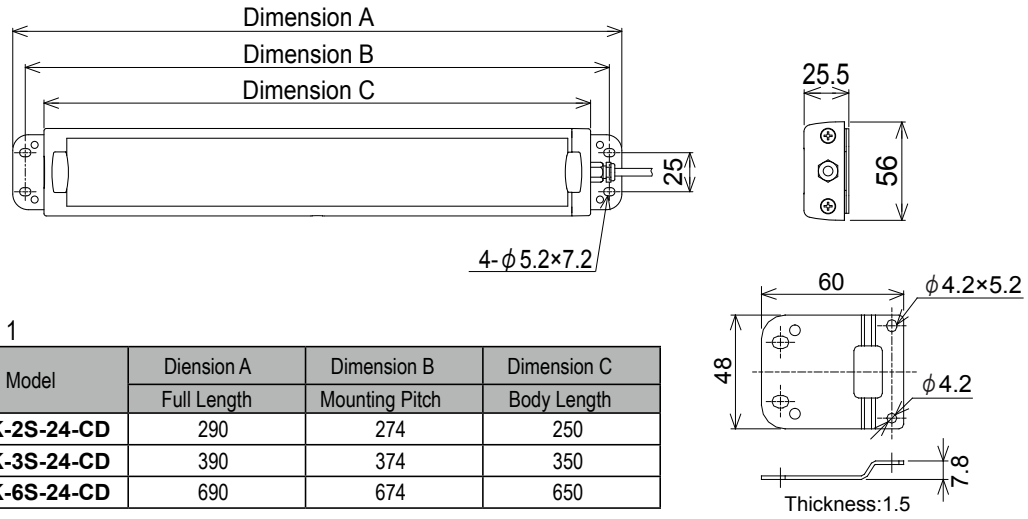


Table 1

| Model | Diension A | Dimension B | Dimension C |
|---|---|---|---|
| | Full Length | Mounting Pitch | Body Length |
| **CWK-2S-24-CD** | 290 | 274 | 250 |
| **CWK-3S-24-CD** | 390 | 374 | 350 |
| **CWK-6S-24-CD** | 690 | 674 | 650 |

## Wiring Diagram

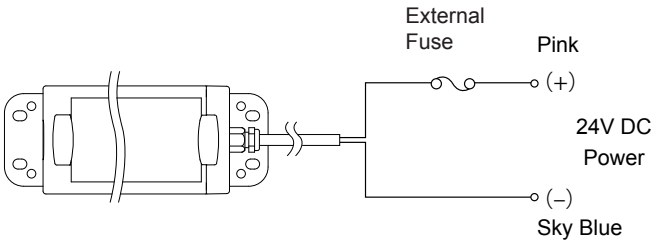


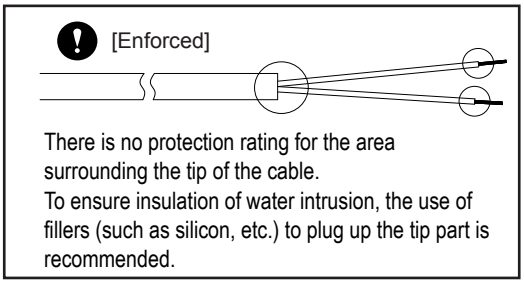


## Oil proof test

It has passed the oil resistant test from the following common cutting oils.

| Company | Oil Type |
|---|---|
| Hangsterfer's | Hangsterfer's S-500 |
| Yushiro Chemical Industry Co., Ltd. | Yushiroken Synthetic #663 |
| Castrol | Syntilo 9954 |
| BlaserSwisslube Inc. | Blasocut BC35LFSW |

Confirmation in result of swelling, contraction, dissolution, exfoliation,separation, cracks, and discoloration by the accelerated impregnation examination with the oil types indicated in the table on the left for diluted oil at 55℃ for 240 hours (ten days) was made.
Due to the additive agents in oil, the application of oils other than the ones mentioned may influence physical properties, therefore, please inquire in advance.

* The mentioned company names, product names, trademarks, etc. are the registered trademarks or trademarks in Japan for each company, and/or other countries.

## Optional Parts

The following brackets can be used to fit various mounting applications.

### Angle-adjustment Brackets

# CLN



Tilt only
(T type)

Daylight color

Pan & Tilt
(PT type)

Daylight color

The CLN Series was designed especially for the machine tool industry where oil, oil mist, other cutting fluids and debris is constantly present (rated IP66G and IP67G). Its ability to pan and tilt allows operators to point the light where it's needed most. The aluminum body and tempered glass protect the unit from hot flying debris. The 6500K color temperature (daylight white) allow objects to be seen clearly.

IP66G IP67G IP69K RoHS UL CE 85 mm

## Flexible Angle Adjustment

■Tilt only (T type)

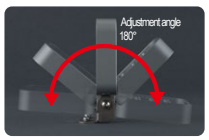


Can tilt 180o and can be folded to 33mm for easier installation.

■Pan & Tilt (PT type)

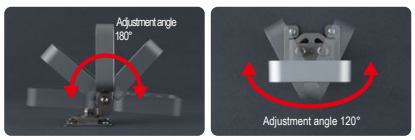


Can tilt 180o or rotated 120o to fit any application. Can be folded to 43mm for easier installation.

## Specifications

| Model | Light source color | Rated Voltage | Operating Voltage Range | Rated Current Consumption | Total luminous flux (typ.) | Central illuminance (lx/1.0m) | Body materials | Operating Temperature Range | Mounting location/ mounting direction | Protection Rating | Vibration Resistance | Mass |
|---|---|---|---|---|---|---|---|---|---|---|---|---|
| **CLN-24-CD-T** | Daylight color | 24V DC | Rated Voltage ±10% | 174mA ±10%/4.2W | 550lm | 820 | Body: aluminum alloy/ Light-emitting component: tempered glass | -40℃ - +60℃ (90%RH or less, no condensation) | Indoor/ omnidirectional | IP66G/IP67G (JIS C0920) IP69K (DIN 40050 part 9) (Excludes cable tip component) | 30Hz total amplitude 0.3mmp-p 2 hours each up-down, left-right, forward-back Total amplitude 0.3mmp-p (10-57Hz), Acceleration 19.6m/s2 (57-150Hz) (JIS C60068-2-6) | 0.36kg |
| **CLN-24-CD-PT** | Daylight color | | | | 550lm | 820 | | | | | | 0.43kg |

## Dimensions (mm)

■Tilt only (T type)

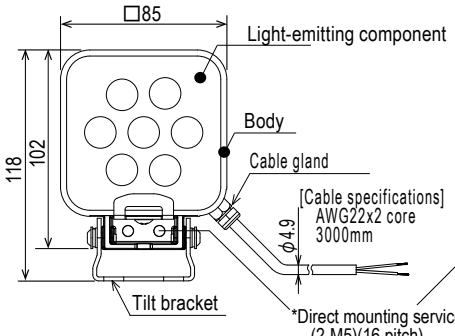


Mounting pitch (2-M6)(26 pitch)

■Pan Tilt (PT type)

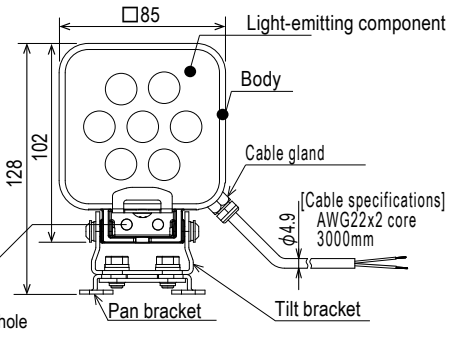


Mounting pitch (4-M6)(45 pitch)

## Model Code

**CLN-24-CD-PT**

Movable Type

| | |
|---|---|
| T | Tilt |
| PT | Pan/Tilt |

## Oil-Proof Test

Passed Oil-proof Test

Product was immersed in the oils listed below in 1:20 dilution at 55oC for 240 hours (10 days).

| Company Name | Oil Name |
|---|---|
| Hangsterfer's | Hangsterfer S500 |
| Yushiro Chemical Industry Co., Ltd. | Yushiroken Synthetic #663 |
| Castrol | Syntilo 9954 |
| Blaser Swisslube | Blasocut BC35LFSW |

At the conclusion of each test the product was examined and it was confirmed that there was no swelling, contraction, dissolution, exfoliation, separation, cracks, discoloration, and penetration.

It is recommended that careful investigation be made before purchase since additive agents in oil may differ from those tested and may influence the physical properties of the product.

*Company names, product names, trademarks, etc. of those listed in the table are each company's registered trademarks in Japan or other countries.

# Optional

## Signal Tower LR series optional parts

### For direct mounted models

### Circular Bracket

Model: SZW-001W

■Mounting dimensions diagram (units: mm)

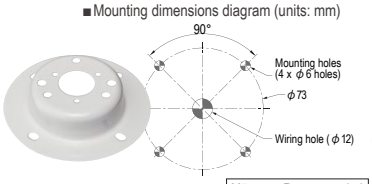


Materials: SPCE

| M5 mountRecommended tightening torque |
|---|
| 1.4N・m |

### Wallmount Bracket

Model: SZK-002W/U/K

SZK-003W/U/K

SZK-004W

Materials: PC

■Mounting dimensions diagram(units: mm)

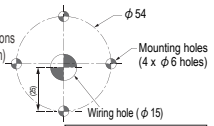


| M5 mountRecommended tightening torque |
|---|
| 1.4N・m |

Materials: PC

Wiring can be taken out in the bracket direction

*M16 x P1.5 cable gland mounting
Please purchase separately.

### L Angle

Model: SZL-001

Materials : SPHC-P

■Mounting Dimensions
(Units : mm)

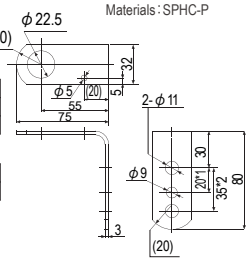


| Screw / Nut |
|---|
| ※1 : M8×2 |
| ※2 : M10×2 |

| Recommended Torque |
|---|
| 12.2 N·m |

### For aluminum pole (N type)

### Circular Multi Pitch Bracket

Model: SZP-001W/U/K

Materials: PC

■Accessory: waterproof packing
Pole waterproof ring
Bind taping screws (2 screws)

■Mounting dimensions diagram (units: mm)

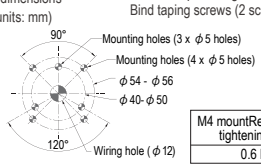


| M4 mountRecommended tightening torque |
|---|
| 0.6 N.m |

### Circular Bracket

Model: SZP-002U

Materials: ADC12

■Mounting dimensions diagram (units: mm)

■Accessory: pole waterproof ring
Bind taping screws (2 screws)

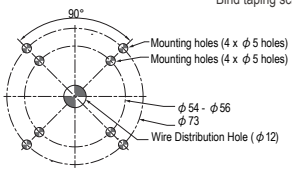


| M4 mountRecommended tightening torque |
|---|
| 0.6 N.m |

### Circular Bracket

Model: SZP-003W/U/K

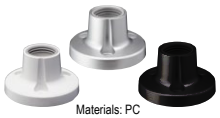

Materials: PC

■Accessory: waterproof packing
Pole waterproof ring
Bind taping screws (2 screws)

■Mounting dimensions diagram
(units: mm)

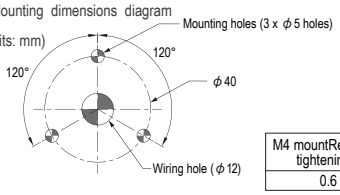


| M4 mountRecommended tightening torque |
|---|
| 0.6 N.m |

### Tilt Bracket

Model: SZQ-001W

Materials: PC

■Accessory: pole waterproof ring
Bind taping screws (2 screws)

■Tiltable range

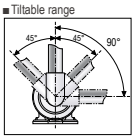


■Mounting dimensions diagram (units: mm)

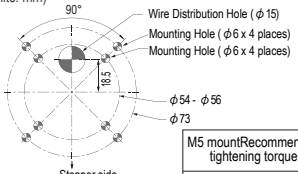


| M5 mountRecommended tightening torque |
|---|
| 1.4N・m |

Watch the video

1 Tilt the body to the left while pushing down the stopper on the lower part of the bracket. (Unlock to free the body side)

2 Pull the body side and tilt to the right. (into a position about 15° from horizontal)

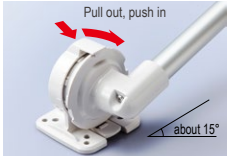


3 The body in to the right, then turn to the right. (Turn it tightly until it locks into place with a click)

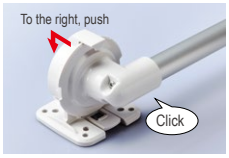


### For aluminum pole (N/T type)

### Wallmount Bracket

Model: SZK-001U

Materials: ADC12

■Mounting dimensions diagram (units: mm)

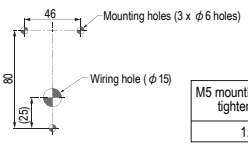


■Accessory: with hexagon socketSet screws (2screws)

| M5 mountRecommended tightening torque |
|---|
| 1.4N・m |

### ■Aluminum pole

(Bind tapping screw for affixing pole (2 screws) included)

*When cutting the poles, do not cut with pole cutters. Use a fret saw, power saw, or jigsaw.
*If changing from direct mounting specifications to pole mounting specifications, please purchase pole brackets (repair parts) together with the aluminum pole as a single item.

| | | |
|---|---|---|
| N type | 100mm | Type: POLE22-0100AN(K) |
| | 300mm | Type: POLE22-0300AN(K) |
| | 500mm* | Type: POLE22-0500AN |
| NK type | 800mm* | Type: POLE22-0800AN(K) |
| | 1000mm* | Type: POLE22-1000AN |

| | | |
|---|---|---|
| T type | 100mm | Type: POLE22-0100AT |
| | 300mm | Type: POLE22-0300AT |
| Nut included | 500mm | Type: POLE22-0500AT |
| | 800mm | Type: POLE22-0800AT |
| | 1000mm | Type: POLE22-1000AT |

*Compatible brackets: SZK-001U, SZP-002U, SZ-010
*We accommodate pole lengths other than the above as custom orders.
Compatible pole lengths: 150mm, 200mm, 250mm, 350mm, 400mm, 450mm, 600mm, 700mm, 900mm

### ■Compatible Direct Mount Bracket

Outline

| Model Name | SZW-940U | SZW-950U | SZW-960U | SZW-970U |
|---|---|---|---|---|
| Signal Tower Size | ϕ40mm | ϕ50mm | ϕ60mm | ϕ70mm |
| Product Conversion | LCE-AW → LR4-WJ | LE-W/LES-AW/LU5 → LR5-WJ | LME-W →LR6-WJ | LHE/LU7 → LR7-WJ |

Current Products: LE ϕ50

New Product: LR4 ϕ40, LR5 ϕ50

Note : Cable exit hole for current products and New products is different

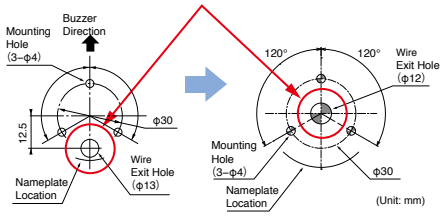


### ■Pole-compatible Adaptor

Outline

| Model Name | SZP-917U |
|---|---|
| Pole diameter compatibility | 21.7mm→17.3mm |

| | Model | Material | Compatible with LR Pole? |
|---|---|---|---|
| Current Product | LCE, LCS | Iron | No |
| | LE, LES | Iron | No |
| | LU5 | - | - |
| | LME, LMS | L:Iron P:Aluminum | Yes |
| | LHE | - | - |
| | LU7 | - | - |
| New Product | LR | Aluminum | Yes |

# Mounting Pole

■Units of each dimension diagram are in mm.

## □70

### SZ-40L type RoHS

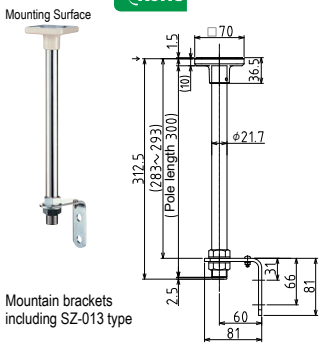


Mountain brackets including SZ-013 type

### SZ-40T type RoHS

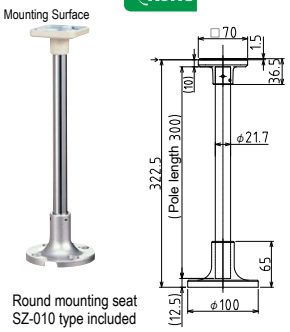


Round mounting seat SZ-010 type included

## ϕ81

### SZ-30L type RoHS

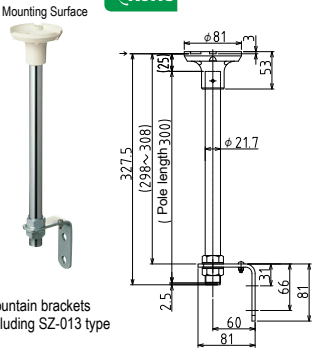


Mountain brackets including SZ-013 type

### SZ-30T type RoHS

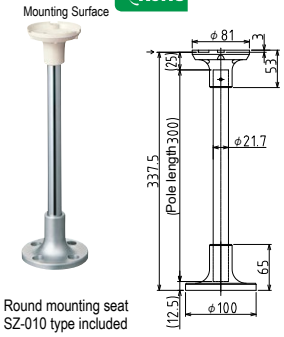


Round mounting seat SZ-010 type included

## ϕ60

### SZ-70L type RoHS

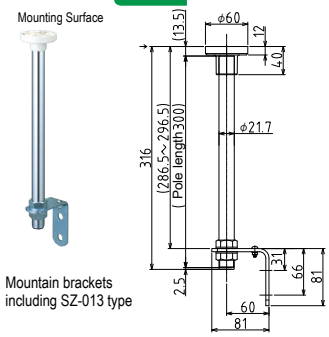


Mountain brackets including SZ-013 type

## Steel pole

22POLE-1000

*Cannot be combined with mounting rubber (SZ-200A, SZ-210).

| Model | Mounting Pole | | | | | |
|---|---|---|---|---|---|---|
| | Bracket | Pole | L type bracket | Cord Bushing | Round mounting base | Compatible models |
| **SZ-70L** | ABS resin | Carbon steel pipe 11-A for mechanical structure | SPHC | EPT | — | LA6 |
| **SZ-30L** | | | | | | RS, RLE, RU, RH-A PS,PES-A, RHE(B), SKH-A, SKH-EA SKHE |
| **SZ-30T** | | | — | — | ADC12 | |
| **SZ-40L** | ADC12 | | SPHC | EPT | — | KUS |
| **SZ-40T** | | | — | — | ADC12 | |

ADC12...12 types of aluminum alloy die casting SPHC...hot rolled soft sheet steel (general use) EPT...ethylene-propylene rubber
*When using the SZ-□type mounting bracket, a cable extension may be necessary depending on the product.

# For LR6-USB

SZP-004W

POLE-800A21




POLE-300A21




POLE-100A21

| Model | Material | Specification | Compatible models |
|---|---|---|---|
| **22POLE-300** | Carbon steel pipes for ordinary piping | ϕ21.7mm pole300mm | LA6 |
| **22POLE-500** | | ϕ21.7mm pole500mm | |
| **22POLE-1000** | | ϕ21.7mm pole1,000mm | |
| **POLE-100A21** | Aluminum | ϕ21.7mm pole100mm | LR6-USBUse with SZW-004W |
| **POLE-300A21** | | ϕ21.7mm pole300mm | |
| **POLE-800A21** | | ϕ21.7mm pole800mm | |

# NPT Adaptor

SZ-904

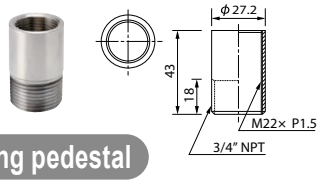


SZ-903

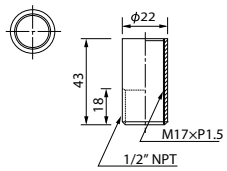


# Circular mounting pedestal

SZ-010 type (for ϕ21.7 holes) RoHS

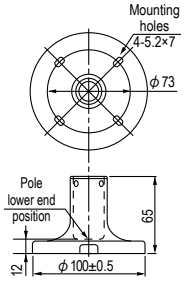


SZ-016A type (for ϕ21.7 holes) RoHS

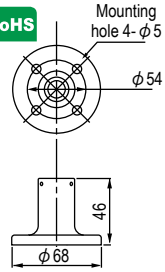


| Model | Material | Compatible models |
|---|---|---|
| **SZ-010** | 12 types of aluminum alloy die casting | LR, LA6, RUP, LR6-USB |
| **SZ-016A** | | LA6, RUP, LR6-USB |

■Units of each dimension diagram are in mm.

# Platform Bracket

SZ-100 type (off-white)

SZ-100D type (off-dark gray)

SZ-100S type (silver)

Dimensions

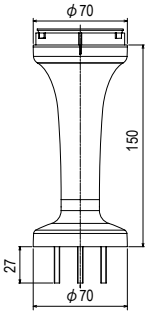


■When mounting SZ-100

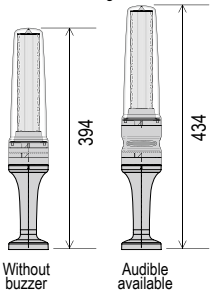


| Model | Material | Compatible models |
|---|---|---|
| **SZ-100** | Heat-resistant ABS | LS7 |
| **SZ-100D** | | |
| **SZ-100S** | Heat-resistant ABS (silver paint) | |

■Units of each dimension diagram are in mm.

# Wall Mount Bracket

## SZ-007

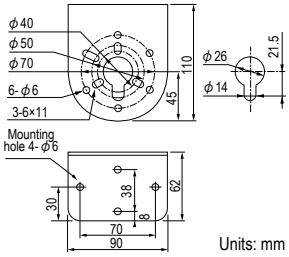


Units: mm

## SZ-008

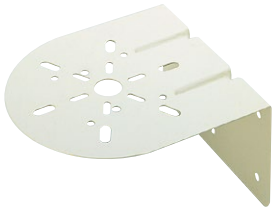

*RFT type is not compatible.

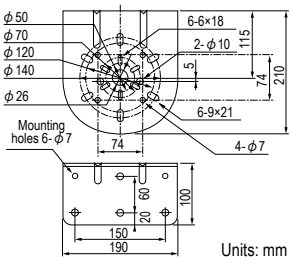


Units: mm

## RF-001

Installation Image

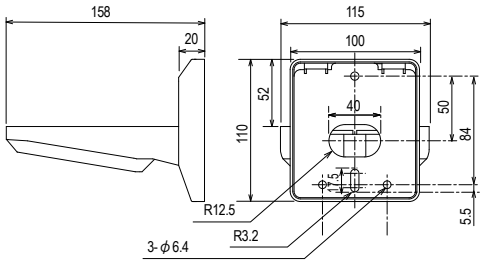


Installation Dimension Drawings

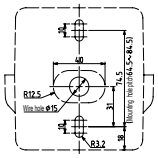

*Attach using the M6 screw in 2 places`

Units: mm

## SZ-023

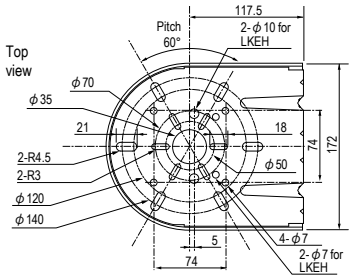

Installation image*RFT type is not compatible.

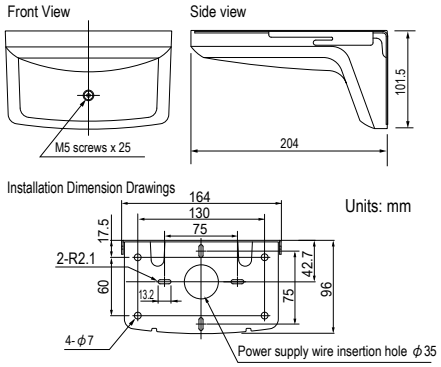


## SZ-110 (off-white) / SZ-110D (off-dark gray) / SZ-110S type (silver)

## Multi-mount Bracket SZ-130

SZ-130 / SZ-130S / SZ-130D

## SZ-170

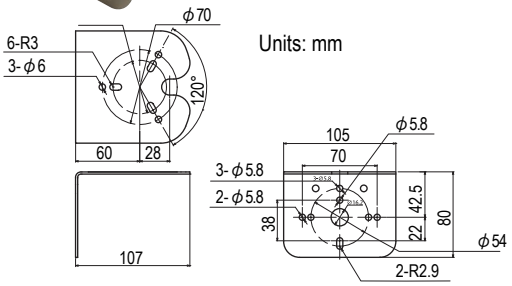


| Model | Material | Compatible models |
|---|---|---|
| **SZ-023** | Bracket: steel (powder coating)<br>Bracket cover: resin (AES) | ϕ50, 70, 120, and 140 mounting pitch type.<br>and □74 type*1 |
| **RF-001** | ABS resin | RFV, RFT |
| **SZ-007** | Electro galvanized zinc plated steel | LHE and ϕ50, 70 mounting pitch type*2 |
| **SZ-008** | | ϕ50, 70, 120, and 140 mounting pitch type.<br>and □74 type |
| **SZ-310AR** | Polycarbonate | CLA |
| **SZ-310ARM** | | |
| **SZ-310AS** | | |
| **SZ-310ASB** | | |
| **SZ-110** | Heat-resistant ABS | LS7 |
| **SZ-110D** | | |
| **SZ-110S** | Heat-resistant ABS (silver paint) | |
| **SZ-170** | SUS304 | LFH and ϕ50, 70 mounting pitch type*3 |

■Units of each dimension diagram are in mm.

*1 Mounting direction may be restricted depending on the wall surface direction.
Parts which protrude from the main body cannot be mounted backwards.
*2 SZ-007 is not compatible with LGE/LKEH.
*3 Please note that SKHE (B), SKH (B) -A, and SKH-EA AC100V specifications do not pass through the center hole of the side panel as they come with a power socket.

## Mounting Gasket

SZ-200A

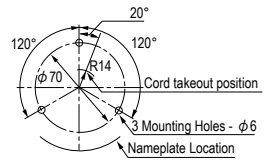


RH(B)-A
Dimensional diagram of mounting face

SZ-210

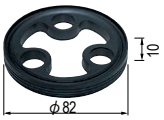


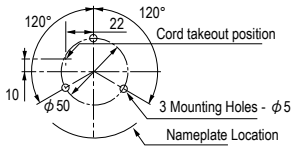


RU,RS,RLE, PS, PES-A
Dimensional diagram of mounting face

| Model | Material | Compatible models |
|---|---|---|
| **SZ-200A** | Ethylene - propylene rubber | RH(B)-A, RHE(B) |
| **SZ-210** | | RU, RS, RLE, PS, PES-A, PSE |

■Units of each dimension diagram are in mm.

## Locking Ring Rubber Cover

SKP-001 model

| Model | Compatible models |
|---|---|
| **SKP-001** | SKP-A |

■Units of each dimension diagram are in mm.

## Mounting Bracket for LED Work Light

SZ-310AR
Rear attachment screw mount (2 included)

SZ-310ARM
Rear attachment magnetic mount (2 included)

SZ-310AR and SZ-310ARM

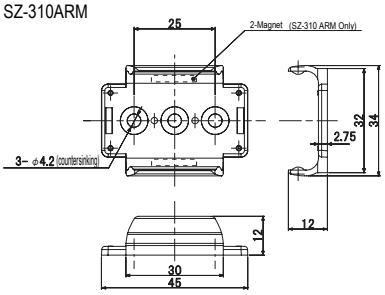


SZ-310AS
Side attachment screw mount (2 included)

SZ-310AS

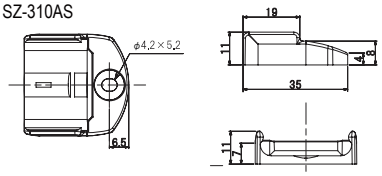


SZ-310ASB
Rear attachment screw mount. Compatible with CLB-24N. (2 included)

SZ-310ASB

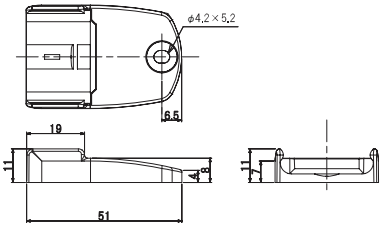


SZ-320KS

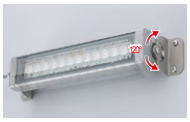

Installation Image

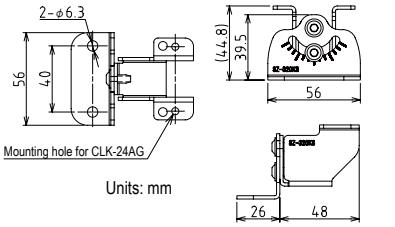


Units: mm

CLK-001 type

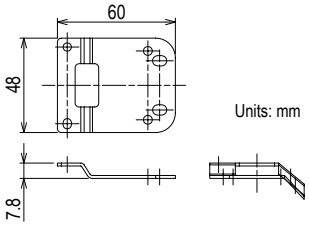


Units: mm

## Ceiling Mount Bracket

RF-002

Installation Image

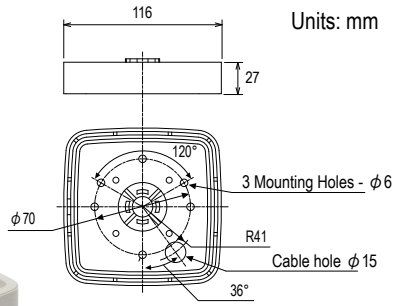


Units: mm

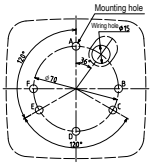


Installation Dimension Drawings

*If screwing in 2 locations, use A-D and B-F; if mounting in 3 locations, use A-C-E. Please mount with M6 screws.

| Model | Material | Compatible models |
|---|---|---|
| **RF-002** | ABS resin | RFV, RFT |

*Cannot be used in a location where it will in contact with water.

## Speaker

SPB-2E-W (2W 8Ω)
(off-white)

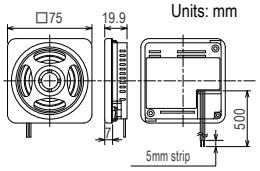


SPB-5E (5W 8Ω)

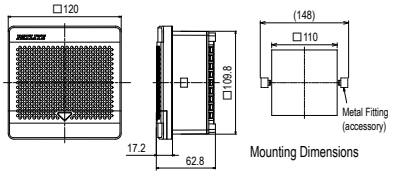


SPL-5 (5W 8Ω)

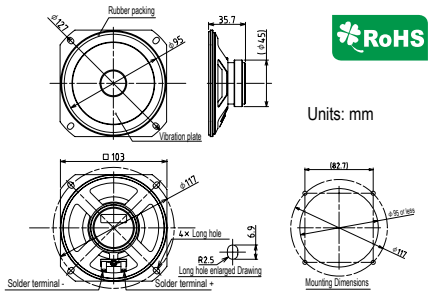


SPW-5E (5W 8Ω)

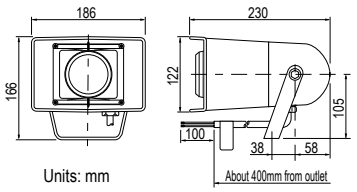


## Mounting bracket

BK-001
Use 1 seal for installation (2 included)
Compatible models: BK, BKV, SPB-5E

BK-001 cannot be used with legacy products with embedded □130mm mounting holes.

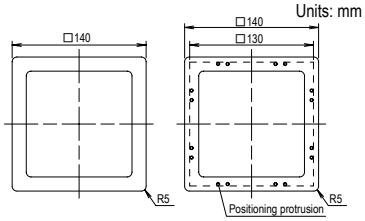


BK-002-J (light gray)
BK-002-K (dark gray)
Compatible models: BK, BKV, SPB-5E

Mounting image

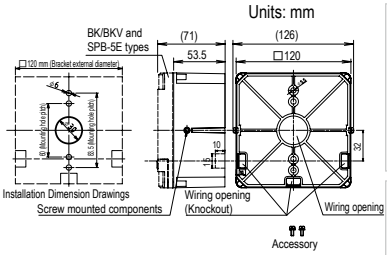

## Cable

Connector with cable
(Omron model)
SZ-120-02 (2m)
(XS2F-D821-DH0-R)
SZ-120-05 (5m)
(XS2F-D821-GH0-R)
SZ-120-10 (10m)
(XS2F-D821-JH0-R)
Supported type: LS7,LR6-WC

## SD card

SD card (2GB)
SDV-2GP

## Global AC adaptor

ADP-001
Compatible models
NH series, NBM-D88NN, PHE-3FB3,
PHC-D08, WDR-LE-Z2
Compatible countries
Japan, Europe, U.S., China, Korea, Taiwan, Thailand, Indonesia, Canada, Philippines, Vietnam

# Replacement Parts

## Bulb

| Shape | Bulb No. | Ratings | Part No. |
|---|---|---|---|
| Bulb Shape: RP35/BA15S | 1 | 12V 35W | D01203501-F1 |
| | 2 | 24V 35W | D02403501-F1 |
| Bulb Shape: RP35/BA15D | 5 | 48V 35W | D04803502-F1 |
| Bulb Shape: G18/BA15S | 8 | 6V 3W | D00600303-F1 |
| | 9 | 12V 10W | D01201003A-F1 |
| | 10 | 24V 10W | D02401003A-F1 |
| | 11 | 48V 10W | D04801003-F1 |
| | 12 | 12 V5W | D01200503A-F1 |
| 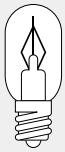 Bulb Shape: T20/E12 | 13 | 30V 10W | D03001006A-F1 |
| | 14 | 110V 10W | D11001006A-F1 |
| | 15 | 220V 10W | D22001006A-F1 |
| | 16 | 110V 15W | D11001506A-F1 |
| | 17 | 220V 15W | D22001506A-F1 |
| Bulb Shape: G14/BA9S | 18 | 12V 6W | D01200604-F1 |
| | 19 | 24V 6W | D02400604-F1 |
| Bulb Shape: T10/E10 | 22 | 110V 3W | D11000307-F1 |
| | 27 | 12V 0.11A | D012/1107-F1 |
| | 28 | 24V 0.11A | D024/1107-F1 |
| Bulb Shape: RP35/BA15D | 36 | 120V 40W (for vibration resistance) | D12004024-F1 |
| | 37 | 220V 30W | D22003024-F1 |
| Vibration Resistant 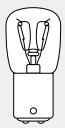 Bulb Shape: T20/BA15D | 39 | 28V 11W | D02801111-F1 |
| | 40 | 110V 12W | D11001211-F1 |
| | 41 | 250V 11W | D25001111-F1 |

| Shape | Bulb No. | Ratings | Part No. |
|---|---|---|---|
| 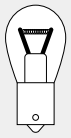 Bulb Shape: S25/BA15S | 42 | 12V 23W | D01202305-F1 |
| | 43 | 24V 25W | D02402505-1F1 |
| Vibration Resistant 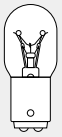 Bulb Shape: T20/BA15D | 50 | 28V 20W | D02802011-F1 |
| Vibration Resistant Bulb Shape: T20/BA15D | 51 | 110V 20W | D11002011-F1 |
| | 53 | 250V 20W | D25002011-F1 |
| 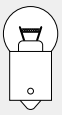 Bulb Shape: G18/BA15S | 54 | 12V 15W | D01201503-F1 |
| | 55 | 24V 20W | D02402003-F1 |

*Bulb Shape: glass bulb shape/base shape
*Light bulb filament shape may vary from diagram by light bulb.
*Light bulbs come in packs of 10.
*Stock for some light bulbs may be limited, as products become discontinued. We ask for your understanding in this regard.

# Replacement Parts

## Please refer to website for repair parts

*We cannot replace the lowest tier of the LES-A type. In addition, wiring is based only on unit color at the time of sale, so there are restrictions on replacement and number of tiers.

[Production for the main unit is discontinued, below are only replacement parts]

| Product Model | Product name | Specifications | Part Number |
|---|---|---|---|
| ME(S)-A | Red globe unit (Clear lens type) | LED-UT red ME(S)-A | B72100223-1F1 |
| | Amber globe unit (Clear lens type) | LED-UT amber ME(S)-A | B72100223-2F1 |
| | Green globe unit (Clear lens type) | LED-UT green ME(S)-A | B72100115-3F1 |
| | Blue globe unit (Clear lens type) | LED-UT blue ME(S)-A | B72100115-4F1 |
| | White globe unit (Clear lens type) | LED-UT white ME(S)-A | B72100115-7F1 |
| | 1 Tier Shaft | Screw 1-tier ME(S)-A | S33552110-0346F1 |
| | 2 Tier Shaft | Screw 2-tier ME(S)-A | S33552110-0376F1 |
| | 3 Tier Shaft | Screw 3-tier ME(S)-A | S33552110-03108F1 |
| | 4 Tier Shaft | Screw 4-tier ME(S)-A | S33552110-03138F1 |
| | 5 Tier Shaft | Screw 5-tier ME(S)-A | S33552110-03168F1 |
| MP(S) | Red globe unit | LED-UT red MP, MPS | B72100182-1F1 |
| | Amber globe unit | LED-UT amber MP, MPS | B72100182-2F1 |
| | Green globe unit | LED-UT green MP, MPS | B72100182-3F1 |
| | Blue globe unit | LED-UT blue MP, MPS | B72100182-4F1 |
| | White globe unit | LED-UT white MP, MPS | B72100182-7F1 |
| | 1 Tier Shaft | Screw 1-tier MP, MPS | S33552120-0355F1 |
| | 2 Tier Shaft | Screw 2-tier MP, MPS | S33552120-0390F1 |
| | 3 Tier Shaft | Screw 3-tier MP, MPS | S33552120-03125F1 |
| | 4 Tier Shaft | Screw 4-tier MP, MPS | S33552120-03160F1 |
| | 5 Tier Shaft | Screw 5-tier MP, MPS | S33552120-03195F1 |
| LGE | Red globe unit | LED-UT red LGE(H) | B32100004-1F1 |
| | Amber globe unit | LED-UT amber LGE(H) | B32100004-2F1 |
| | Green globe unit | LED-UT green LGE(H) | B32100004-3F1 |
| | Blue globe unit | LED-UT blue LGE(H) | B32100004-4F1 |
| | White globe unit | LED-UT white LGE(H) | B32100004-7F1 |
| | 1 Tier Shaft | Screw 1-tier LGE, LGEH | B62910028-1F1 |
| | 2 Tier Shaft | Screw 2-tier LGE, LGEH | B62910028-2F1 |
| | 3 Tier Shaft | Screw 3-tier LGE, LGEH | B62910028-3F1 |
| | 4 Tier Shaft | Screw 4-tier LGE, LGEH | B62910028-4F1 |
| WME-A | Red globe unit | LED-UT red WME-A | B72100117-1F1 |
| | Amber globe unit | LED-UT amber WME-A | B72100117-2F1 |
| | Green globe unit | LED-UT green WME-A | B72100117-3F1 |
| | Blue globe unit | LED-UT blue WME-A | B72100117-4F1 |
| | White globe unit | LED-UT white WME-A | B72100117-7F1 |
| | 2 Tier Shaft | Screw 2-tier LM☐, LHE, WME | S33552120-04100F1 |
| | 3 Tier Shaft | Screw 3-tier LM☐, LHE, WME | S33552120-04140F1 |
| | 4 Tier Shaft | Screw 4-tier LHE, WME | S33552120-04180F1 |
| | 5 Tier Shaft | Screw 5-tier LHE and 3-tier SE | S33552120-04220F1 |
| | 2 Tier Metal Fitting | Metal Fitting 2-tier WME-A | B85130021-4F1 |
| | 3 Tier Metal Fitting | Metal Fitting 3-tier WME-A | B85130021-3F1 |
| | 4 Tier Metal Fitting | Metal Fitting 4-tier WME-A | B85130021-2F1 |
| | 5 Tier Metal Fitting | Metal Fitting 5-tier WME-A | B85130021-1F1 |
| LKEH | Red globe unit | LED-UT red LKEH | B72100151-1F1 |
| | Amber globe unit | LED-UT amber LKEH | B72100151-2F1 |
| | Green globe unit | LED-UT green LKEH | B72100151-3F1 |
| | Blue globe unit | LED-UT blue LKEH | B72100151-4F1 |
| | White globe unit | LED-UT white LKEH | B72100151-7F1 |
| | 1 Tier Shaft | Shaft LKEH for 1 x 1-tier unit | B62910033-1F2 |
| | 2 Tier Shaft | Shaft LKEH for 2 x 1-tier unit | B62910033-2F2 |
| | 3 Tier Shaft | Shaft LKEH for 3 x 1-tier unit | B62910033-3F2 |
| | 4 Tier Shaft | Shaft LKEH for 4 x 1-tier unit | B62910033-4F2 |

| Product Model | Product name | Specifications | Part Number |
|---|---|---|---|
| LCE-A, LCS-A | Red globe unit | LED-UT red LC☐-A | B72100208-1F1 |
| | Amber globe unit | LED-UT amber LC☐-A | B72100208-2F1 |
| | Green globe unit | LED-UT amber LC☐-A | B72100208-3F1 |
| | Blue globe unit | LED-UT blue LC☐-A | B72100208-4F1 |
| | White globe unit | LED-UT white LC☐-A | B72100208-7F1 |
| | Red globe unit (Clear lens type) | LED-UT Translucent red LC☐-AZ | B72100209-1F1 |
| | Amber globe unit (Clear lens type) | LED-UT Translucent amber LC☐-AZ | B72100209-2F1 |
| | Green globe unit (Clear lens type) | LED-UT Translucent green LC☐-AZ | B72100209-3F1 |
| | Blue globe unit (Clear lens type) | LED-UT Translucent blue LC☐-AZ | B72100209-4F1 |
| | 1 Tier Shaft | Screw 1-tier LC☐-A | S33552120-0351F1 |
| | 2 Tier Shaft | Screw 2-tier LC☐-A | S33552120-0386F1 |
| | 3 Tier Shaft | Screw 3-tier LC☐-A | S33552120-03121F1 |
| | 4 Tier Shaft | Screw 4-tier LC☐-A | S33552120-03158F1 |
| | 5 Tier Shaft | Screw 5-tier LC☐-A | S33552120-03193F1 |
| LE, LES* | Red globe unit | LED-UT red LE, LES | B72100210-1F1 |
| | Amber globe unit | LED-UT amber LE, LES | B72100210-2F1 |
| | Green globe unit | LED-UT green LE, LES | B72100210-3F1 |
| | Blue globe unit | LED-UT blue LE, LES | B72100210-4F1 |
| | White globe unit | LED-UT white LE, LES | B72100210-7F1 |
| | Red globe unit (for 12V DC type) | LED-UT for red LE 12V | B72100211-1F1 |
| | Amber globe unit (for 12V DC type) | LED-UT for amber LE 12V | B72100211-2F1 |
| | Green globe unit (for 12V DC type) | LED-UT for green LE 12V | B72100211-3F1 |
| | Blue globe unit (for 12V DC type) | LED-UT for blue LE 12V | B72100211-4F1 |
| | White globe unit (for 12V DC type) | LED-UT for white LE 12V | B72100211-7F1 |
| | 1 Tier Shaft | Screw 1-tier LE, LES | S33552120-0445F1 |
| | 2 Tier Shaft | Screw 2-tier LE, LES | S33552120-0475F1 |
| | 3 Tier Shaft | Screw 3-tier LE, LES | S33552120-04105F1 |
| | 4 Tier Shaft | Screw 4-tier LE, LES | S33552120-04135F1 |
| | 5 Tier Shaft | Screw 5-tier LE, LES | S33552120-04165F1 |
| LME LMS | Red globe unit | LED-UT red LM☐ | B72100206-1F1 |
| | Amber globe unit | LED-UT amber LM☐ | B72100206-2F1 |
| | Green globe unit | LED-UT green LM☐ | B72100206-3F1 |
| | Blue globe unit | LED-UT blue LM☐ | B72100206-4F1 |
| | White globe unit | LED-UT white LM☐ | B72100206-7F1 |
| | Red globe unit (Clear lens type) | LED-UT translucent red LM☐-Z | B72100207-1F1 |
| | Amber globe unit (Clear lens type) | LED-UT translucent amber LM☐-Z | B72100207-2F1 |
| | Green globe unit (Clear lens type) | LED-UT translucent green LM☐-Z | B72100207-3F1 |
| | Blue globe unit (Clear lens type) | LED-UT translucent blue LM☐-Z | B72100207-4F1 |
| | 1 Tier Shaft | Screw 1-tier LM☐, LHE, WME | S33552120-0455F1 |
| | 2 Tier Shaft | Screw 2-tier LM☐, LHE, WME | S33552120-04100F1 |
| | 3 Tier Shaft | Screw 3-tier LM☐, LHE, WME | S33552120-04140F1 |
| | 4 Tier Shaft | Screw for 4-tier LM☐ | S33552120-04185F1 |
| | 5 Tier Shaft | Screw for 5-tier LM☐ | S33552120-04225F1 |
| LHE-A | Red globe unit | LED-UT red LHE | B72100147-1F1 |
| | Amber globe unit | LED-UT amber LHE | B72100147-2F1 |
| | Green globe unit | LED-UT green LHE | B72100147-3F1 |
| | Blue globe unit | LED-UT blue LHE | B72100147-4F1 |
| | White globe unit | LED-UT white LHE | B72100147-7F1 |
| | 1 Tier Shaft | Screw 1-tier LM☐, LHE, WME | S33552120-0455F1 |
| | 2 Tier Shaft | Screw 2-tier LM☐, LHE, WME | S33552120-04100F1 |
| | 3 Tier Shaft | Screw 3-tier LM☐, LHE, WME | S33552120-04140F1 |
| | 4 Tier Shaft | Screw 4-tier LHE, WME | S33552120-04180F1 |
| | 5 Tier Shaft | Screw 5-tier LHE, 3-tier SE | S33552120-04220F1 |

# Replacement Parts

●We stock parts that can be replaced by the customer as repair parts.

You can refer to the list of replacement or repair parts on our website by going to: www.patlite.com/

You can search for replacement or repair parts by going to our homepage and clicking on "Customer Support" and then scroll down to "Replacement Parts" on the menu.

Purchase from the retail store you purchased your product from, or contact your PATLITE sales representative for more information.

# Information on discontinued models

For next generation models, you can go to our homepage and click on "Customer Support" and then scroll down to "Discontinued Products" on the menu.
If the information you are looking for is not found, contact your PATLITE sales representative for more information.

## ■Next-generation models

Some compatibility between legacy and next-generation models may not have been kept for mounting structure, wiring, operating environment and power consumption
Refer to the catalog, product specifications, webpage and instruction manual for details on next-generation models.

## ■Period to maintain support and repair part sales availability

Due to the unpredictable circumstances to maintain stock for consumption parts, please understand that the support period for the sale period of repair parts may be shortened due to the consumption of parts and procurement status.

# Caution on long-term use

In general, products may experience safety-related issues such as aging degradation, insulation failures of electronic components and circuit boards, and smoke, fire, and electrification from products due to contact failures when using products for a long period of time.

In addition, products may experience problems such as deformation damage, water intrusion, and malfunction due to material degradation, such as resins, metals, and rubber parts.

While the product lifespan varies upon conditions such as frequency of use, environmental conditions, it is recommended to not use products for more than 10 years, unless specified in the product specifications or instruction manual.

If the products are used in environments with vibration and shock, it may cause mounted products to come loose, become damaged from falling or may lead to injury to the customer.

Be sure to regularly inspect the products at least one to two times per year that the mountings are tightly fastened and re-tighten them when necessary.

The lifespan of consumable parts (motors, light bulbs, rotor bushings, packing, O-rings, bearings and xenon boards, etc.) may vary based on their environment.

# History of PATLITE

KASUGA Electric was merged with the PATLITE CORPORATION. 2017

Business integration with Kasuga Electric Co., Ltd. in 2017

PATLITE(THAILAND) CO., LTD. was established in 2016

The multi-color LED signal tower was developed and released; PATLITE TAIWAN CO., LTD. was established in 2014

PATLITE CORPORATION became a wholly owned subsidiary of Inaba Denki Sangyo CO., LTD. in 2013

PATLITE KOREA CO., LTD. was established in 2011

2010

PATLITE (EUROPE) GmbH was established in 2009

A presentation of future management reform was abolished in 2008

An earthquate early warning display terminal was developed and sold in 2007

Listed on the first section of the Tokyo Stock Exchange and the first Section of the Osaka Securities Exchange.

PATLITE (CHINA) Corporation was established in 2005

The multi-color LED display board was developed and released in 2003

Listed in the Tokyo Stock Exchange second section in 2001

2000

~~Listed in the Osaka Securites Exchange second section in 2000~~

PT. PATLITE INDONESIA Factory was established and started production in 1999

PATLITE (SINGAPORE) PTE LTD was established in 1998

The boomerang-type warning light was developed and released in 1996

The first stage of construction for the Sanda factory was finished at the Techno-park in Sanda City, Hyogo Japan.

The company name was changed to “the PATLITE Corporation” in 1994

1990

~~The LED display board~~ was developed and released in 1990

PATLITE (U.S.A.) Corporation was established in 1989

The electronic siren amplifier for emergency vehicles was developed and released.

The micro-motor BTO was stopped in order to strengthen our own production. 1985

The voice synthesizer was developed and sold in the audio warning market in 1984

The tiered signal tower was developed and sold in 1982

1980

The light-bar warning light for patrol cars was developed and sold in 1977

1970

The first revolving warning light SK-12 was developed and released in 1965

Sasaki Electric Corporation was established in 1963

1960

The first DC micro-motor for audio equipment was developed in 1955

1950

The Sasadenki Research Center in Abeno-ku Osaka was opened in 1947

1940

# PATLITE Global Network

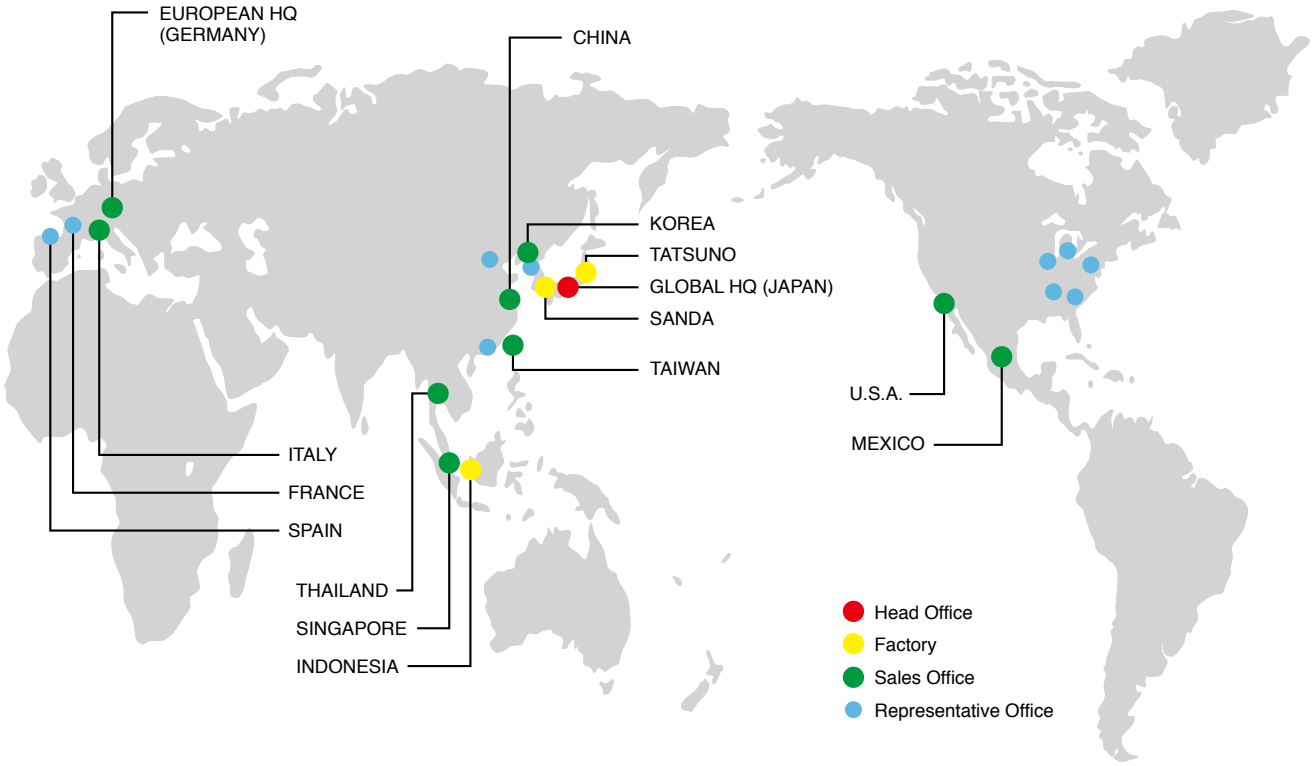



## PATLITE Corporation

4-1-3, Kyutaromachi, Chuo-ku, Osaka 541-0056 Japan
International Sales Division
TEL.+81-6-7711-8953 FAX.+81-6-7711-8961 E-mail: overseas@patlite.co.jp

### PATLITE (U.S.A.) Corporation

20130 S. Western Ave. Torrance, CA 90501, U.S.A.
TEL.+1-310-328-3222 FAX.+1-310-328-2676 E-mail: sales@patlite.com

### PATLITE (SINGAPORE) PTE LTD

No.2 Leng Kee Road, #05-01 Thye Hong Centre, Singapore 159086
TEL.+65-6226-1111 FAX.+65-6324-1411 E-mail: sales@patlite.com.sg

### PATLITE (CHINA) Corporation

Room 1102-1103, No.55, Lane 777, Guangzhong Road (West), ZhabeiDistrict, Shanghai, China 200072
TEL.+86-21-6630-8969 FAX.+86-21-6630-8938 E-mail: sales@patlite.cn

### PATLITE Europe GmbH

Am Soeldnermoos 8, D-85399 Hallbergmoos, Germany
TEL.+49 -811-9981-9770-0 FAX.+49-811-9981-9770-90 E-mail: info@patlite.eu

### PATLITE KOREA CO., LTD.

A-2603, Daesung D-POLIS, 606, Seobusaet-gil, Geumcheon-gu, Seoul, 08504, Korea
TEL.+82-2-523-6636 FAX.+82-2-861-9919 E-mail: sales@patlite.co.kr

### PATLITE TAIWAN CO., LTD.

2F-1, No.215, Sec. 2, Chengde Rd., Datong Dist., Taipei City 10364, Taiwan (R.O.C.)
TEL.+886-2-2552-9611 FAX.+886-2-2552-9811 E-mail: info@patlite.tw

### PATLITE (THAILAND) CO., LTD.

Olympia Thai Tower, 15th Floor 444 Ratchadapisek Road Samsennok, Huay Kwang Bangkok 10310, Thailand
TEL.+66-2-541-5431 FAX.+66-2-541-5429 E-mail: sales_150716@patlite.co.th

### PATLITE MEXICO S.A. de C.V.

Plaza de La Paz No. 102, int. 712 Guanajuato Puerto Interior, Silao, Gto, C.P.36275, Mexico
TEL.+52-472-748-9124 E-mail: ventas@patlite.com.mx


**www.patlite.com**


● PATLITE, the PATLITE logo are either registered trademarks or trademarks of PATLITE Corporation in JAPAN and/or other countries.
● MPEG Layer-3 audio coding technology licensed from Fraunhofer IIS and Thomson Licensing.
● The names of other companies and products are trademarks or registered trademarks of their respective companies.


**⚠ CAUTION**

To ensure correct use of these products, read the "Instruction Manual" prior to use. Failure to follow all safeguards can result in fire, electric shock, or other accidents. Specifications are subject to change without notice.


O-AI08A | EN | 1904 A